GRAVITY LOADING SCHEDULE

AREA	CONSTR. DEAD LOAD	FINISH / ROOFING	OTHER	TOTAL DEAD LOAD	LIVE LOAD	TOTAL LOAD
M&O BUILDING ROOFS	SEE S-103					
MONITORING BOOTH GROUND FL.	100 (8" SLAB)	10	--	110	100	210
MONITORING BOOTH ROOF	10 (STEEL/DECK)	10	--	20	30	50

NOTE: ALL LOADS ARE SHOWN IN POUNDS PER SQUARE FOOT.

WIND DESIGN CRITERIA

AT MONITORING BOOTH AND ELECTRICAL BUILDING:

SIMPLIFIED DESIGN PROCEDURE-II PER NYCBC 1609.6.3.
BUILDING LESS THAN 100 FEET HIGH. 20 PSF. 1609.6.3.1.1.1.1
TO COVER ECCENTRICY LOAD CASES AND ACCOUNT FOR EDGE ACCELERATIONS, USE 30 PSF TYPICALLY.

SEISMIC DESIGN CRITERIA

MONITORING BOOTH

REF. GEOTECH. REPORT BY LOUIS BERGER, JULY 2010
SOIL PROFILE TYPE AND SIZE COEFFICIENT, S = 1.5
SITE CLASS D
SEISMIC USE GROUP I
IMPORTANCE FACTOR, I = 1.0
SEISMIC DESIGN CATEGORY C
R = 3 (STRUCTURAL STEEL SYSTEMS NOT SPECIFICALLY DETAILED FOR SEISMIC RESISTANCE)
SDS = 0.37
BASE SHEAR, V = (1.2 SDS / R) W
W = BUILDING WEIGHT

DEFORMED BAR TENSION DEVELOPMENT LENGTH (l_d)

FOR NORMAL WEIGHT STONE CONCRETE & UNCOATED BARS

BAR SIZE	3000 PSI CONCRETE		4000 PSI CONCRETE		5000 PSI CONCRETE		6000 PSI CONCRETE	
	CASE I	CASE II	CASE I	CASE II	CASE I	CASE II	CASE I	CASE II
#3	17	25	15	22	13	20	12	18
#4	22	33	19	29	17	26	16	24
#5	28	42	24	36	22	32	20	30
#6	33	50	29	43	26	39	24	35
#7	48	72	42	63	38	56	34	51
#8	55	83	48	72	43	64	39	59
#9	62	93	54	81	48	72	44	66
#10	70	105	61	91	54	81	50	74
#11	78	116	67	101	60	90	55	82

NOTES:

1. FOR HORIZONTAL REINFORCEMENT WITH 12 IN. OR MORE FRESH CONCRETE CAST BELOW IT, E SHALL BE 1.3x THE VALUES GIVEN ABOVE.
2. FOR EPOXY-COATED BARS:
   a. WHERE CONCRETE COVER IS LESS THAN $3d_b$, OR CLEAR SPACING IS LESS THAN $6d_b$, E SHALL BE 1.5x THE VALUES GIVEN ABOVE.
   b. WHERE CONCRETE COVER IS EQUAL TO OR GREATER THAN $3d_b$ AND CLEAR SPACING IS GREATER THAN $6d_b$, E SHALL BE 1.2x THE VALUES GIVEN ABOVE.

CASE I: CLEAR SPACING OF BARS BEING DEVELOPED OR SPLICED NOT LESS THAN d_b, CLEAR COVER NOT LESS THAN d_b, AND STIRRUPS OR TIES THROUGHOUT L_d NOT LESS THAN THE CODE MINIMUM OR CLEAR SPACING OF BARS BEING DEVELOPED OR SPLICED NOT LESS THAN $2d_b$, AND CLEAR COVER NOT LESS THAN d_b

CASE II: OTHER CASES

DEFORMED BAR TENSION LAP SPLICE - CLASS B

FOR NORMAL WEIGHT STONE CONCRETE & UNCOATED BARS

BAR SIZE	3000 PSI CONCRETE		4000 PSI CONCRETE		5000 PSI CONCRETE		6000 PSI CONCRETE	
	CASE I	CASE II	CASE I	CASE II	CASE I	CASE II	CASE I	CASE II
#3	22	33	19	28	17	25	16	23
#4	29	43	25	37	23	34	21	31
#5	36	54	31	47	28	42	26	38
#6	43	65	37	56	34	50	31	46
#7	63	94	54	81	49	73	45	67
#8	72	107	62	93	56	83	51	76
#9	81	121	70	105	63	94	57	86
#10	91	136	79	118	71	106	64	96
#11	101	151	87	131	78	117	71	107

DEFORMED BAR COMPRESSION DEVELOPMENT LENGTH (l_{dc})

FOR NORMAL WEIGHT STONE CONCRETE & UNCOATED BARS

BAR SIZE	3000 PSI CONCRETE	4000 PSI CONCRETE	5000 PSI CONCRETE	6000 PSI CONCRETE
#3	9	8	8	8
#4	11	10	9	9
#5	14	12	12	12
#6	17	15	14	14
#7	20	17	16	16
#8	22	19	18	18
#9	25	22	21	21
#10	28	25	23	23
#11	31	27	26	26

DEFORMED BAR COMPRESSION LAP SPLICE

FOR NORMAL WEIGHT STONE CONCRETE & UNCOATED BARS

BAR SIZE	3000 PSI CONCRETE	4000 PSI CONCRETE	5000 PSI CONCRETE	6000 PSI CONCRETE
#3	12	12	12	12
#4	15	15	15	15
#5	19	19	19	19
#6	23	23	23	23
#7	27	27	27	27
#8	30	30	30	30
#9	34	34	34	34
#10	39	39	39	39
#11	43	43	43	43

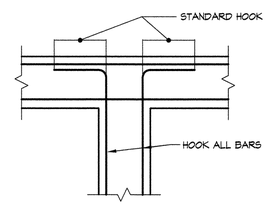

TEE-INTERSECTION

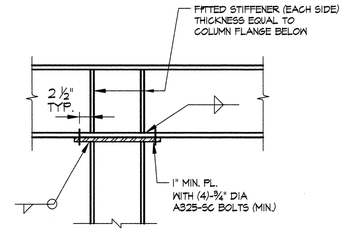

TYPICAL DETAIL
FOR BEAM CONTINUOUS OVER COLUMN

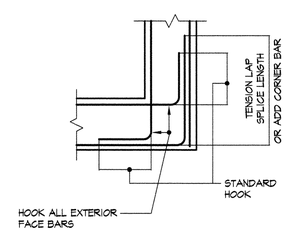

CORNER

NOTE:
FOR TENSION LAP SPLICE LENGTH AND DEVELOPMENT LENGTH SEE TABLE

TYPICAL DETAIL
HORIZONTAL REINFORCEMENT AT CORNERS AND JUNCTIONS OF WALLS AND BEAMS

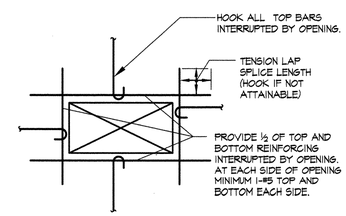

TYPICAL DETAIL
ADDITIONAL REINFORCEMENT AT OPENING IN FRAMED SLAB

NO UNDERPINNING REQUIRED.

RSA # 13418

NEW YORK CITY DEPARTMENT OF DESIGN + CONSTRUCTION
DIVISION OF STRUCTURES
BUREAU OF ARCHITECTURE & ENGINEERING

PROJECT NAME:
HARPER ST. YARD

32-11 HARPER STREET,
QUEENS, NY 11368
CAPITAL PROJECT NUMBER
HWQF027C

Architect:
nARCHITECTS, PLLC
68 JAY #317
BROOKLYN, NY 11201
T: 718.260.0845 F: 718.260.0847

MEP Engineer:
PLUS GROUP
231 WEST 29th STREET, RM. 706
NEW YORK, NY 10001
T: 212.233.2700 F: 212.233.2727

Structural Engineer:
ROBERT SILMAN ASSOCIATES
88 UNIVERSITY PLACE
NEW YORK, NY 10003
T: 212.620.7970 F: 212.620.8157

Environmental & Fuel Consultant:
URS
77 GOODELL STREET
BUFFALO, NY 14203
T: 716.856.5636 F: 716.856.2545

Code Consultant:
J CALLAHAN CONSULTING INC.
299 BROADWAY SUITE 1420
NEW YORK, NY 10007
T: 212.766.2115 F: 212.766.2787

Date:	Issue:
05.19.10	75% SD
06.02.10	80% SD
11.17.10	100% Schematic Design
02.09.11	100% Design Dev.
04.06.11	75% CD
03.07.12	100% CD
06.06.12	100% CD - Revised
10.12.12	**Bid Set**

Sheet title:
LOAD SCHEDULES, REBAR TABLES & TYPICAL DETAILS
Scale:

Seal and Signature:

STATE OF NEW YORK · MICHAEL EZRA OPPENHEIMER · 076885 · LICENSED PROFESSIONAL ENGINEER

Date: 03.07.12
Project No.: 0902
Dwg By: MS/EMS
Chk By: EMS/NO

Dwg No:
S-201.00

GENERAL NOTES

1. ALL STRUCTURAL WORK SHALL BE COORDINATED WITH ARCHITECTURAL AND MECHANICAL DRAWINGS AND SHALL CONFORM TO THE PROJECT SPECIFICATIONS, INCLUDING THE CITY OF NEW YORK BUILDING CODE, 2008 EDITION.
2. CONTRACTOR SHALL PROVIDE TEMPORARY SHORING, BRACING, SHEETING AND MAKE SAFE ALL FLOORS, ROOFS, WALLS AND ADJACENT PROPERTY AS PROJECT CONDITIONS REQUIRE. SHORING AND SHEETING SHALL BE DESIGNED BY A STATE OF NEW YORK LICENSED PROFESSIONAL ENGINEER HIRED BY THE CONTRACTOR, WHO SHALL SUBMIT SHOP DRAWINGS AND CALCULATIONS FOR THE OWNER'S REVIEW.
3. DIMENSIONS AND ELEVATIONS OF EXISTING CONSTRUCTION GIVEN IN STRUCTURAL DRAWINGS ARE BASED ON INFORMATION CONTAINED IN VARIOUS ORIGINAL DESIGN AND CONSTRUCTION DOCUMENTS PROVIDED BY THE OWNER, AND LIMITED FIELD OBSERVATIONS AND MEASUREMENTS. THE CONTRACTOR SHALL VERIFY ALL INFORMATION PERTAINING TO EXISTING CONDITIONS BY ACTUAL MEASUREMENT AND OBSERVATION AT THE SITE. ALL DISCREPANCIES BETWEEN ACTUAL CONDITIONS AND THOSE SHOWN IN THE CONTRACT DOCUMENTS SHALL BE REPORTED TO THE ENGINEER OF RECORD FOR HIS EVALUATION BEFORE THE AFFECTED CONSTRUCTION IS PUT IN PLACE.

FOUNDATIONS

1. NEW TOPPING/LEVELLING SLAB AT THE EXISTING BUILDING SHALL BEAR ON THE EXISTING SLAB ON GRADE.
2. BUILDING FOUNDATIONS AT THE NEW MONITORING BOOTH SHALL BEAR ON THE EXISTING CONCRETE FOUNDATION OF THE PREVIOUSLY DEMOLISHED BUILDING.

CONCRETE

1. ALL CONCRETE WORK SHALL CONFORM TO THE ACI "BUILDING CODE REQUIREMENTS FOR STRUCTURAL CONCRETE" (ACI 318), LATEST EDITION.
2. ALL CONCRETE SHALL BE NORMAL WEIGHT CONCRETE WITH A MINIMUM COMPRESSIVE STRENGTH OF 4,000 PSI AT 28 DAYS, UNLESS OTHERWISE NOTED.
3. REINFORCING STEEL SHALL BE DEFORMED BARS CONFORMING TO ASTM A615, GRADE 60 OR A775 EPOXY COATED WHEN CALLED OUT ON PLAN. REINFORCING STEEL SHALL BE DETAILED ACCORDING TO THE ACI "DETAILS AND DETAILING OF REINFORCEMENT", (ACI 315), LATEST EDITION.
4. STRUCTURAL FIBER REINFORCING SHALL BE A PATENTED COARSE MONOFILAMENT, SELF-FIBRILLATING, POLYPROPYLENE/POLYETHYLENE FIBER. PROVIDE "TUF STRAND SF" BY THE EUCLID CHEMICAL COMPANY OR APPROVED EQUAL. DOSAGE SHALL BE 5.0 POUNDS PER CUBIC YARD, UNLESS OTHERWISE NOTED.
5. COORDINATE SIZE AND LOCATION OF ALL OPENINGS AND PIPE SLEEVES WITH ARCHITECTURAL AND MECHANICAL DRAWINGS. MINIMUM CONCRETE BETWEEN SLEEVES SHALL BE 6".
6. ALL GROUT SHALL BE NONSHRINK WITH A MINIMUM COMPRESSIVE STRENGTH OF 5000 PSI.
7. PROVIDE CLEARANCE FROM FACE OF CONCRETE TO REINFORCEMENT AS FOLLOWS:
   SLABS, NON-EXPOSED: 3/4"
   SLABS, EXPOSED: 1-1/2"
   ON GROUND: 3"
8. SHOP DRAWINGS SHALL BE SUBMITTED TO THE STRUCTURAL ENGINEER FOR REVIEW AND APPROVAL. NO CONCRETE WORK SHALL COMMENCE WITHOUT APPROVED SHOP DRAWINGS.

STRUCTURAL STEEL

1. ALL STRUCTURAL STEEL WORK SHALL CONFORM TO THE FOLLOWING GOVERNING STANDARDS:
   A. AISC "SPECIFICATION FOR THE DESIGN, FABRICATION AND ERECTION OF STRUCTURAL STEEL FOR BUILDINGS, "LATEST EDITION.
   B. THE AMERICAN WELDING SOCIETY (AWS D1.1) "CODE FOR WELDING IN BUILDING CONSTRUCTION," LATEST EDITION.
2. ALL STRUCTURAL STEEL SHALL CONFORM TO THE FOLLOWING ASTM SPECIFICATIONS:
   A. WIDE FLANGE BEAMS, COLUMNS AND STRUCTURAL TEES: ASTM A992
   B. CHANNELS, ANGLES AND PLATES: ASTM A36 UNLESS OTHERWISE NOTED
   C. HOLLOW STRUCTURAL SECTIONS: ASTM A500, GRADE B
   D. BOLTED CONNECTIONS OF BEAMS OR GIRDERS ARE TO BE MADE WITH ASTM A325 BOLTS
3. STEEL CONNECTIONS SHALL BE STANDARD AISC FRAMED BEAM CONNECTIONS.
   A. PROVIDE CONNECTIONS BASED ON REACTION AS DETERMINED FROM AISC UNIFORM LOAD TABLE. (UNLESS OTHERWISE NOTED ON PLANS.)
   B. REINFORCING IS TO BE PROVIDED AT CONNECTIONS WHERE CUTS REDUCE THE SHEAR OR MOMENT CAPACITY BELOW THAT REQUIRED TO SUSTAIN THE REACTION. FLANGES AND WEB ARE TO BE REINFORCED WHERE THE LOCAL CAPACITY TO SUSTAIN CONNECTION LOAD IS INADEQUATE.
   C. CONNECTIONS SHALL BE DESIGNED FOR SHEAR AND ECCENTRICITY, CONSIDERING THAT THE CONNECTION IS AN EXTENSION OF THE BEAM AND GIRDERS.
4. ALL BEAMS EXCEPT CANTILEVER BEAMS SHALL BE FABRICATED WITH NATURAL CAMBER UP. CANTILEVER BEAMS SHALL BE FABRICATED SO THAT NATURAL CAMBER RAISES CANTILEVER END.
5. WELDING SHALL BE PERFORMED BY CERTIFIED LICENSED, AWS-QUALIFIED WELDERS. ELECTRODES SHALL BE AWS 5.1, CLASS E70XX (USE LOW HYDROGEN ELECTRODES FOR A572, GRADE 50 STEEL).
6. SHOP PAINT EXPOSED STEEL MEMBERS, STEEL MEMBERS NOT ENCASED IN CONCRETE OR SPRAY FIREPROOFED, AND ALL STEEL MEMBERS AT THE EXTERIOR WALL WITH TNEMEC #10-99. FIELD PAINT ALL EXPOSED MEMBERS WITH TNEMEC 530 OMNITHANE OR APPROVED EQUAL.
8. MASONRY ANCHORS SHALL BE HILTI "HIT" ADHESIVE ANCHORS AS MANUFACTURED BY HILTI FASTENING SYSTEMS, INC., OR APPROVED EQUAL, THE SIZE AS INDICATED ON THE DRAWINGS. THEY SHALL BE INSTALLED AS PER MANUFACTURER'S INSTRUCTIONS.
9. SHOP AND ERECTION DRAWINGS SHALL BE SUBMITTED TO THE STRUCTURAL ENGINEER FOR REVIEW AND APPROVAL. NO FABRICATION OF STEEL SHALL COMMENCE WITHOUT APPROVED SHOP DRAWINGS.

STEEL DECK

1. ALL METAL DECK WORK SHALL CONFORM TO THE AISI "SPECIFICATION FOR THE DESIGN OF COLD-FORMED STEEL STRUCTURAL MEMBERS," LATEST EDITION.
2. ALL METAL DECK UNITS AND ACCESSORY ITEMS SHALL BE FORMED FROM STEEL SHEETS CONFORMING TO ASTM A611 OR A653 WITH A MINIMUM YIELD STRENGTH OF 33,000 PSI. BEFORE FORMING, THE STEEL SHEET SHALL RECEIVE A PROTECTIVE COATING CONFORMING TO ASTM A653, GRADE 40.
3. ALL METAL DECK SHALL BE SHORED AS REQUIRED BY PLANS OR BY SPAN AND LOAD CONDITIONS TO SUPPORT WET WEIGHT OF CONCRETE AND ALL CONSTRUCTION LOADS.
4. EXCEPT AS OTHERWISE NOTED, EDGE LAPS SHALL BE CONNECTED WITH 3/4" DIAM. FUSION WELDS AT A SPACING TO PROVIDE SUFFICIENT DIAPHRAGM STRENGTH TO MAINTAIN BUILDING ALIGNMENT AND TO SUSTAIN LOCAL CONSTRUCTION LOADS WITHOUT DISTORTION OR SEPARATION. MAXIMUM SPACING SHALL BE 3' -0" o/c.
5. EXCEPT AS OTHERWISE NOTED, DECK SHALL BE ATTACHED TO STRUCTURAL STEEL BY 3/4"Ø FUSION WELDS @12"o/c. AT END AND INTERIOR SUPPORTS PERPENDICULAR TO THE DECK SPAN AND AT EDGE AND INTERIOR SUPPORTS PARALLEL TO THE DECK SPAN. WELDS MAY BE OMITTED IN RIBS IN WHICH SHEAR CONNECTORS ARE TO BE APPLIED, EXCEPT THAT EACH DECK SECTION SHALL HAVE SUFFICIENT WELDS TO ADEQUATELY SECURE THE DECK, BRING THE DECK INTO DIRECT CONTACT WITH THE SUPPORTING STEEL AND TO PROVIDE SUFFICIENT DIAPHRAGM STRENGTH TO MAINTAIN BUILDING ALIGNMENT.

CONCRETE BLOCK

1. ALL CONCRETE BLOCK WORK SHALL CONFORM TO THE "NATIONAL CONCRETE MASONRY ASSOCIATION SPECIFICATIONS," LATEST EDITION.
2. CONCRETE BLOCK SHALL BE OF LIGHTWEIGHT AGGREGATE AND CONFORM TO THE FOLLOWING STANDARDS:
   SOLID/HOLLOW BLOCK: ASTM C90, GRADE N1, NET AREA COMPRESSIVE STRENGTH OF CONCRETE MASONRY UNIT = 1900 PSI, NET AREA COMPRESSIVE STRENGTH OF MASONRY ASSEMBLY, F'm, USING TYPE S MORTAR, = 1500 PSI.
3. ALL MORTAR SHALL BE ASTM C270, TYPE S.
4. ALL GROUT FOR FILLING CELLS SHALL BE ASTM C 476 WITH MINIMUM COMPRESSIVE STRENGTH OF 2000 PSI BUT NOT LESS THAN THE COMPRESSIVE STRENGTH OF THE MASONRY ASSEMBLY, F'M'.
5. ALL BLOCK DIMENSIONS INDICATED ON STRUCTURAL PLANS ARE NOMINAL DIMENSIONS.

ENGINEERED WOOD PRODUCTS

1. MICRO-LAM BEAMS: PROVIDE ENGINEERED BEAMS, SIZES AS SHOWN, MICROLLAM LVL OR PARALLAM PSL AS MANUFACTURED BY ILEVEL BY WEYERHAEUSER OR APPROVED EQUAL. INSTALL IN STRICT COMPLIANCE WITH THE MANUFACTURER'S STANDARD RECOMMENDATIONS AND DETAILS.

SPECIAL INSPECTIONS

1. INSPECTIONS REQUIRED BY THE N.Y. CITY BUILDING CODE SHALL BE PERFORMED BY A TESTING AGENCY PROVIDED BY THE OWNER FOR THE FOLLOWING ITEMS:
   A. STRUCTURAL STEEL - WELDING (BC 1704.3.1)
   B. STRUCTURAL STEEL - ERECTION AND BOLTING (BC 1704.3.2, 1704.3.3)
   C. CONCRETE - CAST-IN-PLACE (BC 1704.4)
   D. CONCRETE TEST CYLINDERS (BC 1905.6)
   E. CONCRETE DESIGN MIX (BC 1905.3)
   F. MASONRY (BC 1704.5): LEVEL 2 SPECIAL INSPECTIONS (BC Table 1704.5.3)
   G. SOILS - SITE PREPARATION (BC 1704.7.1)
   H. SOILS - FILL PLACEMENT & IN-PLACE DENSITY (BC 1704.7.2, 1704.7.3)
   I. STRUCTURAL SAFETY - STRUCTURAL STABILITY (BC 1704.19)

THE TESTING AGENCY FOR THE INSPECTIONS SHALL FILE ALL APPROPRIATE FORMS WITH THE BUILDING DEPARTMENT.

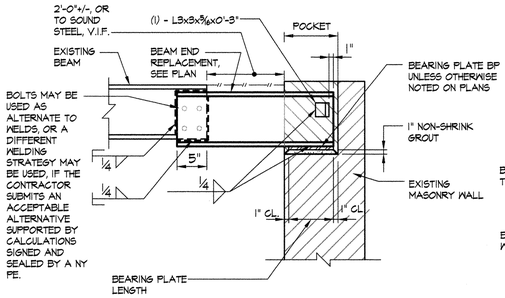

NOTE
FILL HOLLOWS IN WALL UNDER BEARING PLATE SOLID WITH MORTARED BRICK BEFORE PLACING PLATE. (MINIMUM 2 COURSES)

SECTION

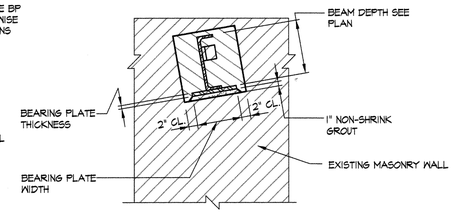

NOTE
CUT POCKET IN WALL AS SHOWN. AFTER BEAM IS INSTALLED, BRICK UP POCKET SOLID. FULL MORTAR BEDDING IN ALL H & V BRICK JOINTS, TO POCKET FACES AND TO BEAM. (ALTERNATE: GROUT SOLID)

ELEVATION

BEARING PL SCHEDULE			
MARK	LENGTH (II TO BM.)	WIDTH (⊥ TO BM.)	THICKNESS
BP-1	6"	6"	5/8"

TYPICAL DETAIL
BEAM BEARING REPAIR ON EXISTING WALL
1 / S-200

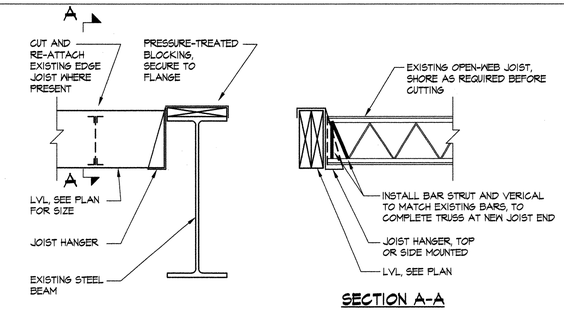

SECTION A-A

TYPICAL DETAIL
LVL TO EXISTING STEEL BEAM
6 / S-200

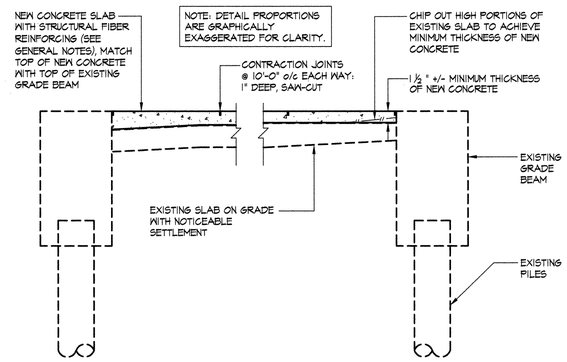

TYPICAL DETAIL
NEW TOPPING / LEVELLING SLAB ON TOP OF EXISTING SLAB ON GRADE
2 / S-200

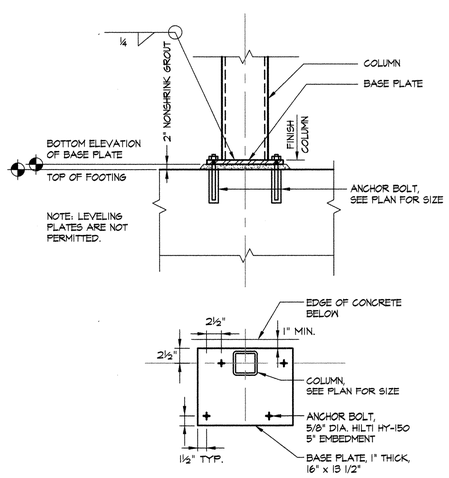

TYPICAL DETAIL COLUMN BASE PLATE
PIPE OR TUBE COLUMN
3 / S-200

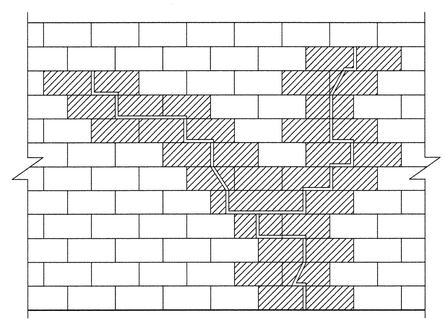

NOTES:

1. DENOTES BRICK TO BE REPLACED. WHERE CRACK IS THRU WALL, REPLACE ALL WYTHES OF BRICK ON EACH SIDE OF CRACK TO 1ST MORTAR JOINT. REPLACE EXISTING HEADERS WITH NEW HEADERS. REPLACE LOOSE AND CRACKED BRICKS. WHERE CRACK IS ONLY IN OUTER WYTHE, REPLACE ONLY OUTER WYTHE.
2. WHERE CRACK IS OPEN AND 1/4" OR LESS AND IS PRESENT ONLY IN THE OUTER WYTHE AND ONLY IN JOINTS, RAKE AND REPOINT JOINTS ONLY.

TYPICAL DETAIL
REPAIR IN BRICK MASONRY
4 / S-200
SCALE: N.T.S.

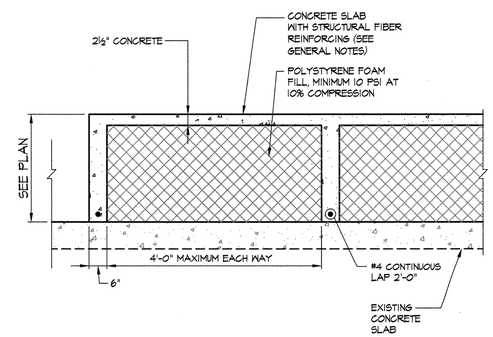

TYPICAL DETAIL
RAISED SLAB ON EXISTING SLAB
5 / S-200

NO UNDERPINNING REQUIRED.

RSA # 13418

NEW YORK CITY DEPARTMENT OF DESIGN + CONSTRUCTION
DIVISION OF STRUCTURES
BUREAU OF ARCHITECTURE & ENGINEERING

PROJECT NAME:
HARPER ST. YARD

32-11 HARPER STREET,
QUEENS, NY 11368
CAPITAL PROJECT NUMBER
HWQF027C

Architect:
nARCHITECTS, PLLC
68 JAY #317
BROOKLYN, NY 11201
T: 718.260.0845 F: 718.260.0847

MEP Engineer:
PLUS GROUP
231 WEST 29th STREET, RM. 706
NEW YORK, NY 10001
T: 212.233.2700 F: 212.233.2727

Structural Engineer:
ROBERT SILMAN ASSOCIATES
88 UNIVERSITY PLACE
NEW YORK, NY 10003
T: 212.620.7970 F: 212.620.8157

Environmental & Fuel Consultant:
URS
77 GOODELL STREET
BUFFALO, NY 14203
T: 716.856.5636 F: 716.856.2545

Code Consultant:
J CALLAHAN CONSULTING INC.
299 BROADWAY SUITE 1420
NEW YORK, NY 10007
T: 212.766.2115 F: 212.766.2787

Date:	Issue:
05.19.10	75% SD
06.02.10	80% SD
11.17.10	100% Schematic Design
02.09.11	100% Design Dev.
04.06.11	75% CD
03.07.12	100% CD
06.06.12	100% CD - Revised
10.12.12	**Bid Set**

Sheet title:
GENERAL NOTES & TYPICAL DETAILS

Scale:

Seal and Signature:

Date: 03.07.12
Project No.: 0902
Dwg By: MS/EMS
Chk By: EMS/NO

Dwg No:
S-200.00

NOTE: NO WORK ON THIS SHEET.
FOR INFORMATIONAL PURPOSES ONLY.

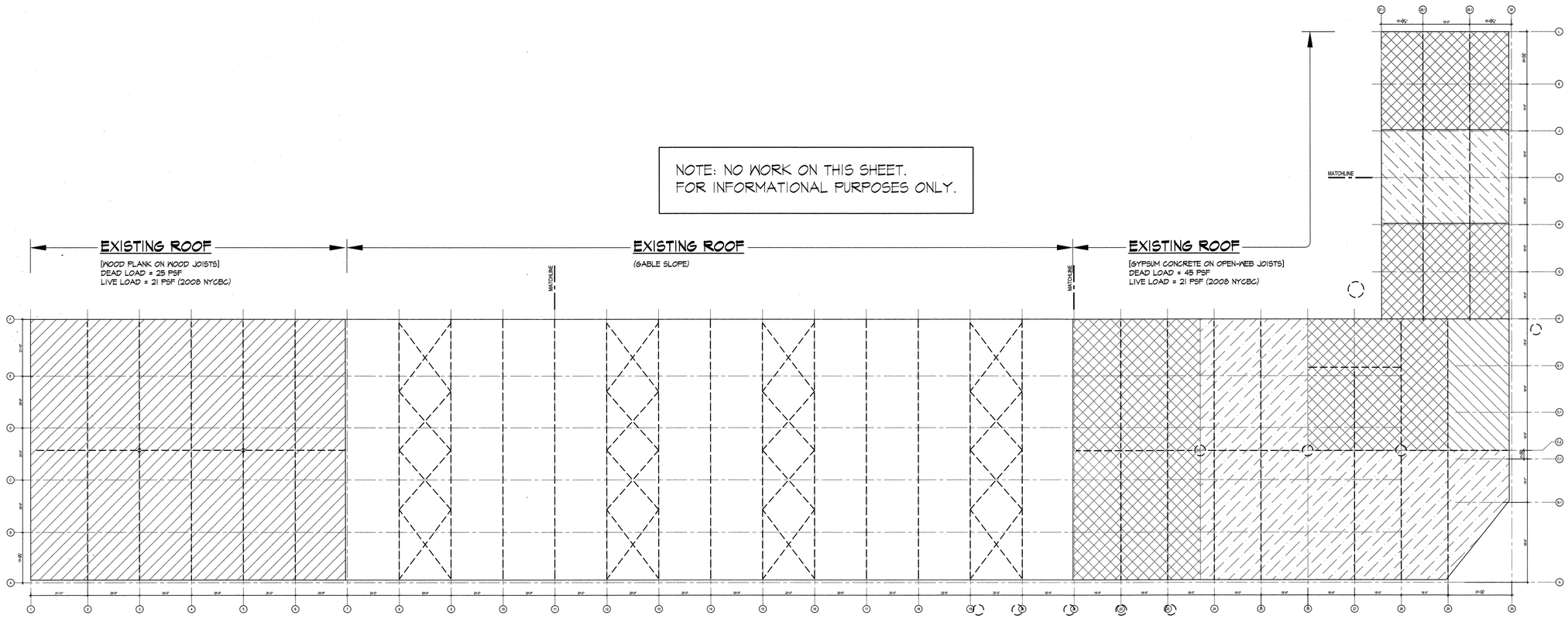

FLAT ROOF LOADING PLAN

SCALE: 3/64"=1'-0"

N

NOTES:

1. SEE S-102A, B, C FOR FLAT ROOF FRAMING AND TRUSS ROOF FRAMING.
2. SEE PLAN FOR EXISTING LOAD ASSUMPTIONS.
3. DEFLECTION LIMITS FOR NON-CEILING ROOF ARE L/120 FOR TOTAL LOAD AND L/180 FOR LIVE LOAD, PER 2008 NYCBC.
4. CONCENTRATED LOADS MUST BE PROPERLY BRIDGED TO THE EXISTING STEEL BEAMS. CONCENTRATED LOADS MUST NOT BE APPLIED TO THE EXISTING JOISTS.

LEGEND:

- INDICATES ADDITIONAL LOAD CAPACITY OF ZERO.
- INDICATES ADDITIONAL LOAD CAPACITY OF 4 POUNDS PER SQUARE FOOT.
- INDICATES ADDITIONAL LOAD CAPACITY OF 6 POUNDS PER SQUARE FOOT.
- INDICATES ADDITIONAL LOAD CAPACITY OF 15 POUNDS PER SQUARE FOOT.
- INDICATES ADDITIONAL LOAD CAPACITY OF 24 POUNDS PER SQUARE FOOT.

NO UNDERPINNING REQUIRED.

RSA # 13418

NEW YORK CITY DEPARTMENT OF DESIGN + CONSTRUCTION
DIVISION OF STRUCTURES
BUREAU OF ARCHITECTURE & ENGINEERING

PROJECT NAME:

HARPER ST. YARD

32-11 HARPER STREET,
QUEENS, NY 11368

CAPITAL PROJECT NUMBER
HWQF027C

Architect:
nARCHITECTS, PLLC
68 JAY #317
BROOKLYN, NY 11201
T: 718.260.0845 F: 718.260.0847

MEP Engineer:
PLUS GROUP
231 WEST 29th STREET, RM. 706
NEW YORK, NY 10001
T: 212.233.2700 F: 212.233.2727

Structural Engineer:
ROBERT SILMAN ASSOCIATES
88 UNIVERSITY PLACE
NEW YORK, NY 10003
T: 212.620.7970 F: 212.620.8157

Environmental & Fuel Consultant:
URS
77 GOODELL STREET
BUFFALO, NY 14203
T: 716.856.5636 F: 716.856.2545

Code Consultant:
J CALLAHAN CONSULTING INC.
299 BROADWAY SUITE 1420
NEW YORK, NY 10007
T: 212.766.2115 F: 212.766.2787

Date:	Issue:
05.19.10	75% SD
06.02.10	80% SD
11.17.10	100% Schematic Design
02.09.11	100% Design Dev.
04.06.11	75% CD
03.07.12	100% CD
06.06.12	100% CD - Revised
10.12.12	**Bid Set**

Sheet title:
FLAT ROOF LOADING PLAN

Scale:

Seal and Signature:

Date: 03.07.12
Project No.: 0902
Dwg By: MS/EMS
Chk By: EMS/NO

Dwg No:
S-123.00

NOTES:

1. EXISTING STRUCTURAL ELEMENTS ARE SHOWN FOR GENERAL INFORMATION ONLY, AND ARE BASED ON LIMITED FIELD MEASUREMENTS AND OBSERVATIONS, SEE GENERAL NOTE #3 ON S-200.

LEGEND:

- INDICATES EXISTING MASONRY BEARING WALL
- (E) INDICATES EXISTING CONCRETE COLUMN
- (E) INDICATES EXISTING STEEL COLUMN DOWN
- (E) INDICATES EXISTING STEEL FRAMING
- TRUSS (E) INDICATES EXISTING STEEL ROOF TRUSS
- 2x6 (E) @24" OC INDICATES EXISTING WOOD FRAMING (NOTE: EXISTING WOOD MEMBERS @ SLOPED ROOF ARE TURNED FLAT)
- 10" (E) OWJ INDICATES EXISTING OPEN-WEB JOISTS
- 2½x9½ (E) @16" o/c INDICATES EXISTING WOOD JOISTS
- INDICATES NEW STEEL FRAMING
- 1/9.5-LVL INDICATES NEW MICROLLAM LVL (OR APPROVED EQUAL) ENGINEERED WOOD FRAMING, (1) 1 3/4" x 9 1/2", U.O.N.
- 2/9.5-LVL INDICATES NEW MICROLLAM LVL (OR APPROVED EQUAL) ENGINEERED WOOD FRAMING, (2) 1 3/4" x 9 1/2", U.O.N.
- INDICATES EXISTING OPENING

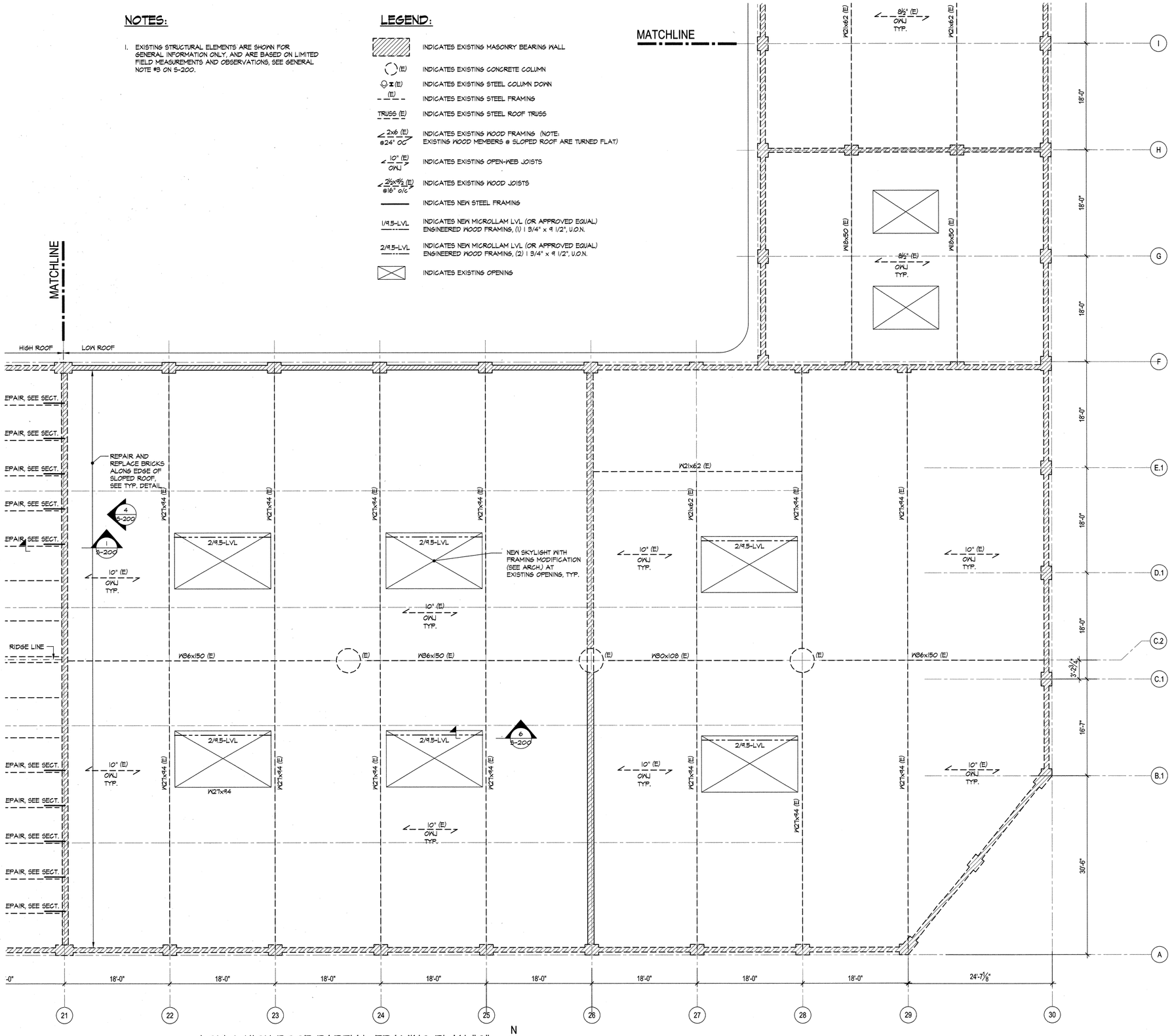

LOW & HIGH ROOF PARTIAL FRAMING PLAN "C"

SCALE: 1/8" = 1'-0"

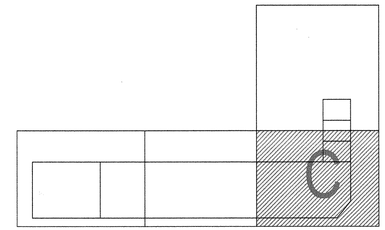

KEY PLAN

NO UNDERPINNING REQUIRED.

RSA # 13418

NEW YORK CITY DEPARTMENT OF DESIGN + CONSTRUCTION
DIVISION OF STRUCTURES
BUREAU OF ARCHITECTURE & ENGINEERING

PROJECT NAME:
HARPER ST. YARD

32-11 HARPER STREET,
QUEENS, NY 11368
CAPITAL PROJECT NUMBER
HWQF027C

Architect:
nARCHITECTS, PLLC
68 JAY #317
BROOKLYN, NY 11201
T: 718.260.0845 F: 718.260.0847

MEP Engineer:
PLUS GROUP
231 WEST 29th STREET, RM. 706
NEW YORK, NY 10001
T: 212.233.2700 F: 212.233.2727

Structural Engineer:
ROBERT SILMAN ASSOCIATES
88 UNIVERSITY PLACE
NEW YORK, NY 10003
T: 212.620.7970 F: 212.620.8157

Environmental & Fuel Consultant:
URS
77 GOODELL STREET
BUFFALO, NY 14203
T: 716.856.5636 F: 716.856.2545

Code Consultant:
J CALLAHAN CONSULTING INC.
299 BROADWAY SUITE 1420
NEW YORK, NY 10007
T: 212.766.2115 F: 212.766.2787

Date:	Issue:
05.19.10	75% SD
06.02.10	80% SD
11.17.10	100% Schematic Design
02.09.11	100% Design Dev.
04.06.11	75% CD
03.07.12	100% CD
06.06.12	100% CD - Revised
10.12.12	**Bid Set**

Sheet title:
LOW & HIGH ROOF PARTIAL FRAMING PLAN "C"
Scale:

Seal and Signature:
STATE OF NEW YORK · MICHAEL EZRA GREENBERG · 078886 · LICENSED PROFESSIONAL ENGINEER

Date: 03.07.12
Project No.: 0902
Dwg By: MS/EMS
Chk By: EMS/NO

Dwg No:
S-122.00

NOTES:

1. EXISTING STRUCTURAL ELEMENTS ARE SHOWN FOR GENERAL INFORMATION ONLY, AND ARE BASED ON LIMITED FIELD MEASUREMENTS AND OBSERVATIONS, SEE GENERAL NOTE #3 ON S-200.

LEGEND:

- INDICATES EXISTING MASONRY BEARING WALL
- (E) — INDICATES EXISTING CONCRETE COLUMN
- (E) — INDICATES EXISTING STEEL COLUMN DOWN
- (E) — INDICATES EXISTING STEEL FRAMING
- TRUSS (E) — INDICATES EXISTING STEEL ROOF TRUSS
- 2x6 (E) @24" OC — INDICATES EXISTING WOOD FRAMING (NOTE: EXISTING WOOD MEMBERS @ SLOPED ROOF ARE TURNED FLAT)
- 10" (E) ONJ — INDICATES EXISTING OPEN-WEB JOISTS
- 2½x9½ (E) @16" o/c — INDICATES EXISTING WOOD JOISTS
- INDICATES NEW STEEL FRAMING
- 1/9.5-LVL — INDICATES NEW MICROLLAM LVL (OR APPROVED EQUAL) ENGINEERED WOOD FRAMING, (1) 1 3/4" x 9 1/2", U.O.N.
- 2/9.5-LVL — INDICATES NEW MICROLLAM LVL (OR APPROVED EQUAL) ENGINEERED WOOD FRAMING, (2) 1 3/4" x 9 1/2", U.O.N.
- INDICATES EXISTING OPENING

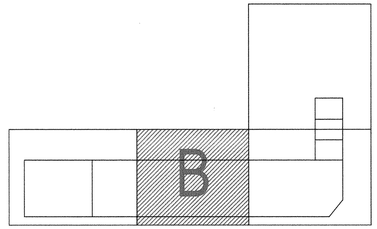

KEY PLAN

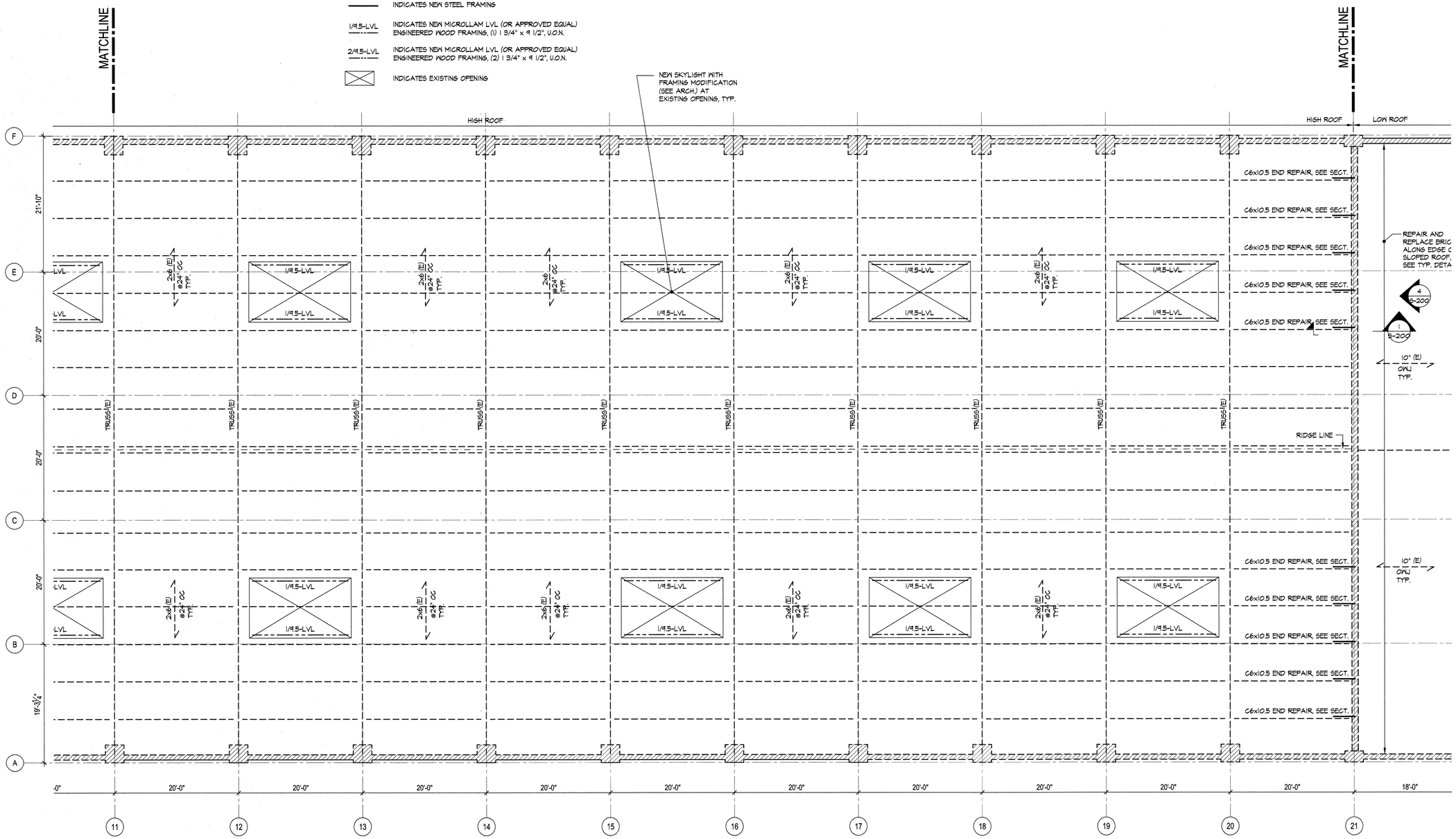

LOW & HIGH ROOF PARTIAL FRAMING PLAN "B"

SCALE: 1/8" = 1'-0"

N

NO UNDERPINNING REQUIRED.

RSA # 13418

NEW YORK CITY DEPARTMENT OF DESIGN + CONSTRUCTION
DIVISION OF STRUCTURES
BUREAU OF ARCHITECTURE & ENGINEERING

PROJECT NAME:
HARPER ST. YARD

32-11 HARPER STREET,
QUEENS, NY 11368
CAPITAL PROJECT NUMBER
HWQF027C

Architect:
nARCHITECTS, PLLC
68 JAY #317
BROOKLYN, NY 11201
T: 718.260.0845 F: 718.260.0847

MEP Engineer:
PLUS GROUP
231 WEST 29th STREET, RM. 706
NEW YORK, NY 10001
T: 212.233.2700 F: 212.233.2727

Structural Engineer:
ROBERT SILMAN ASSOCIATES
88 UNIVERSITY PLACE
NEW YORK, NY 10003
T: 212.620.7970 F: 212.620.8157

Environmental & Fuel Consultant:
URS
77 GOODELL STREET
BUFFALO, NY 14203
T: 716.856.5636 F: 716.856.2545

Code Consultant:
J CALLAHAN CONSULTING INC.
299 BROADWAY SUITE 1420
NEW YORK, NY 10007
T: 212.766.2115 F: 212.766.2787

Date:	Issue:
05.19.10	75% SD
06.02.10	80% SD
11.17.10	100% Schematic Design
02.09.11	100% Design Dev.
04.06.11	75% CD
03.07.12	100% CD
06.06.12	100% CD - Revised
10.12.12	**Bid Set**

Sheet title:
LOW & HIGH ROOF PARTIAL FRAMING PLAN "B"
Scale:

Seal and Signature:
STATE OF NEW YORK · MICHAEL EDRA ORDENER · 078888 · LICENSED PROFESSIONAL ENGINEER

Date: 03.07.12
Project No.: 0902
Dwg By: MS/EMS
Chk By: EMS/NO

Dwg No:
S-121.00

NOTES:

1. EXISTING STRUCTURAL ELEMENTS ARE SHOWN FOR GENERAL INFORMATION ONLY, AND ARE BASED ON LIMITED FIELD MEASUREMENTS AND OBSERVATIONS, SEE GENERAL NOTE #3 ON S-200.

LEGEND:

- INDICATES EXISTING MASONRY BEARING WALL
- (E) INDICATES EXISTING CONCRETE COLUMN
- (E) INDICATES EXISTING STEEL COLUMN DOWN
- (E) INDICATES EXISTING STEEL FRAMING
- TRUSS (E) INDICATES EXISTING STEEL ROOF TRUSS
- 2x6 (E) @24" OC — INDICATES EXISTING WOOD FRAMING (NOTE: EXISTING WOOD MEMBERS @ SLOPED ROOF ARE TURNED FLAT)
- 10" (E) OWJ — INDICATES EXISTING OPEN-WEB JOISTS
- 2½x9½ (E) @16" o/c — INDICATES EXISTING WOOD JOISTS
- INDICATES NEW STEEL FRAMING
- 1/9.5-LVL — INDICATES NEW MICROLLAM LVL (OR APPROVED EQUAL) ENGINEERED WOOD FRAMING, (1) 1 3/4" x 9 1/2", U.O.N.
- 2/9.5-LVL — INDICATES NEW MICROLLAM LVL (OR APPROVED EQUAL) ENGINEERED WOOD FRAMING, (2) 1 3/4" x 9 1/2", U.O.N.
- INDICATES EXISTING OPENING

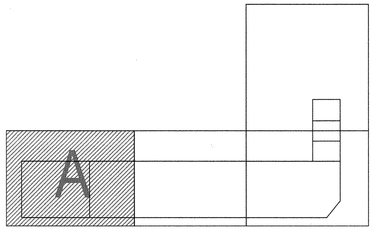

KEY PLAN

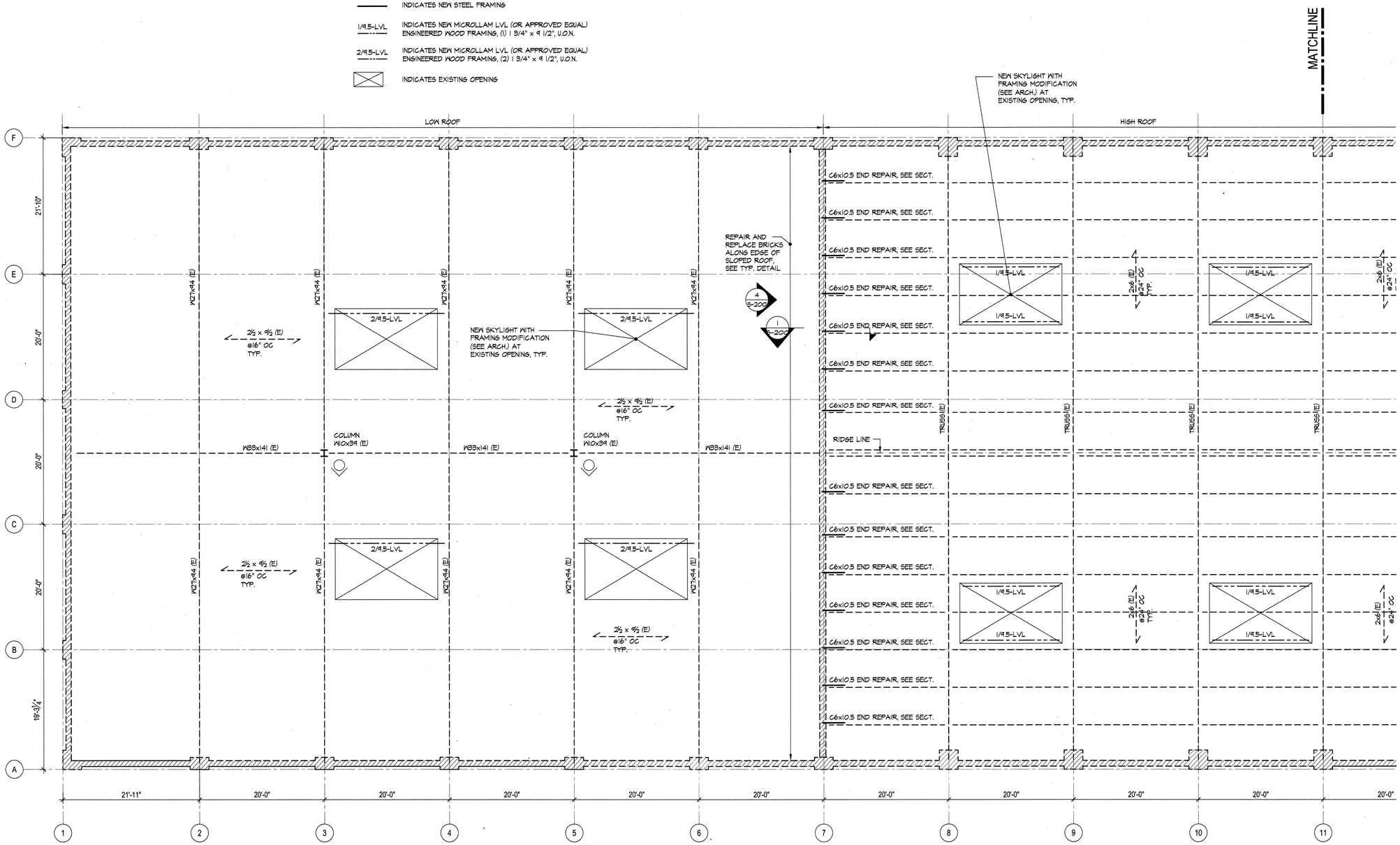

LOW & HIGH ROOF PARTIAL FRAMING PLAN "A"

SCALE: 1/8" = 1'-0"

N

NO UNDERPINNING REQUIRED.

RSA # 13418

NEW YORK CITY DEPARTMENT OF DESIGN + CONSTRUCTION
DIVISION OF STRUCTURES
BUREAU OF ARCHITECTURE & ENGINEERING

PROJECT NAME:
HARPER ST. YARD

32-11 HARPER STREET,
QUEENS, NY 11368
CAPITAL PROJECT NUMBER
HWQF027C

Architect:
nARCHITECTS, PLLC
68 JAY #317
BROOKLYN, NY 11201
T: 718.260.0845 F: 718.260.0847

MEP Engineer:
PLUS GROUP
231 WEST 29th STREET, RM. 706
NEW YORK, NY 10001
T: 212.233.2700 F: 212.233.2727

Structural Engineer:
ROBERT SILMAN ASSOCIATES
88 UNIVERSITY PLACE
NEW YORK, NY 10003
T: 212.620.7970 F: 212.620.8157

Environmental & Fuel Consultant:
URS
77 GOODELL STREET
BUFFALO, NY 14203
T: 716.856.5636 F: 716.856.2545

Code Consultant:
J CALLAHAN CONSULTING INC.
299 BROADWAY SUITE 1420
NEW YORK, NY 10007
T: 212.766.2115 F: 212.766.2787

Date:	Issue:
05.19.10	75% SD
06.02.10	80% SD
11.17.10	100% Schematic Design
02.09.11	100% Design Dev.
04.06.11	75% CD
03.07.12	100% CD
06.06.12	100% CD - Revised
10.12.12	**Bid Set**

Sheet title:
LOW & HIGH ROOF PARTIAL FRAMING PLAN "A"
Scale:

Seal and Signature:
STATE OF NEW YORK · MICHAEL CIRA GREENBERG · 049888 · LICENSED PROFESSIONAL ENGINEER

Date: 03.07.12
Project No.: 0902
Dwg By: MS/EMS
Chk By: EMS/NO

Dwg No:
S-120.00

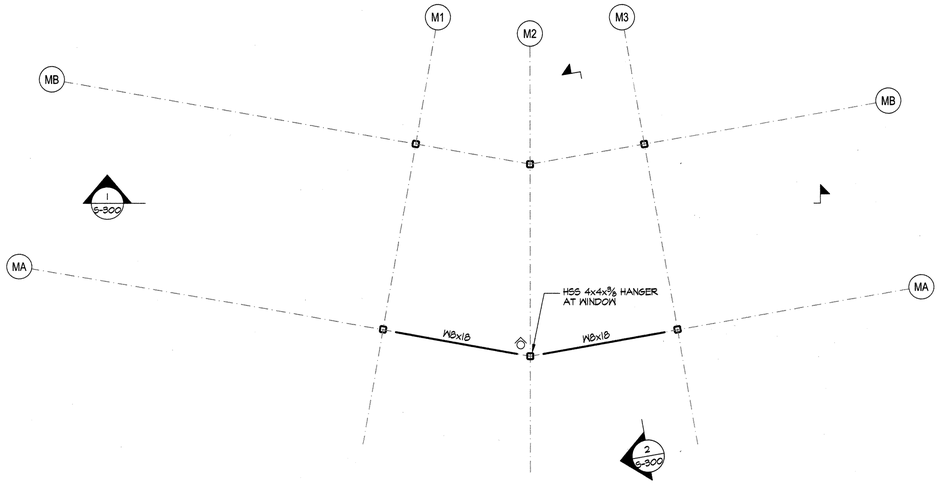

N

NOTE: SEE ROOF PLAN FOR GRID DIMENSIONS.

MID-LEVEL FRAMING PLAN

SCALE: 1/4"=1'-0"

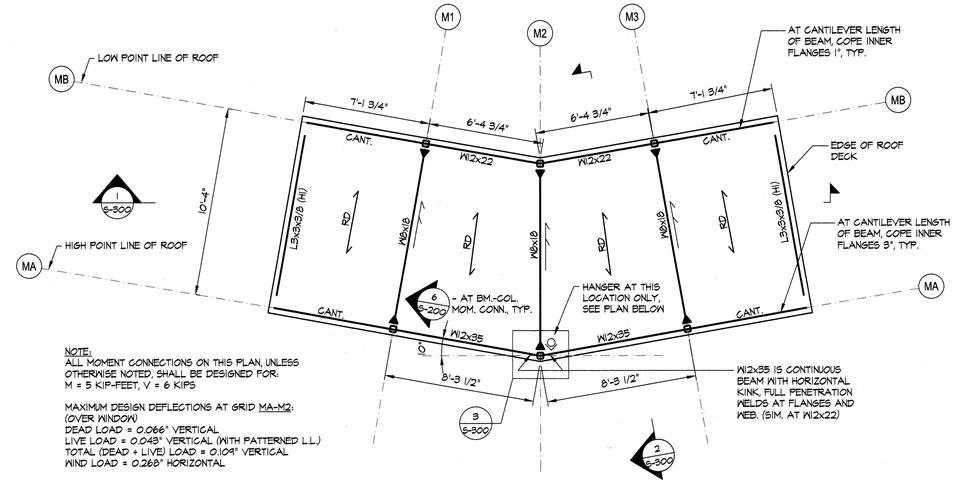

NOTE:
ALL MOMENT CONNECTIONS ON THIS PLAN, UNLESS OTHERWISE NOTED, SHALL BE DESIGNED FOR:
M = 5 KIP-FEET, V = 6 KIPS

MAXIMUM DESIGN DEFLECTIONS AT GRID MA-M2:
(OVER WINDOW)
DEAD LOAD = 0.066" VERTICAL
LIVE LOAD = 0.043" VERTICAL (WITH PATTERNED LL)
TOTAL (DEAD + LIVE) LOAD = 0.109" VERTICAL
WIND LOAD = 0.268" HORIZONTAL

N

ROOF FRAMING PLAN

SCALE: 1/4"=1'-0"

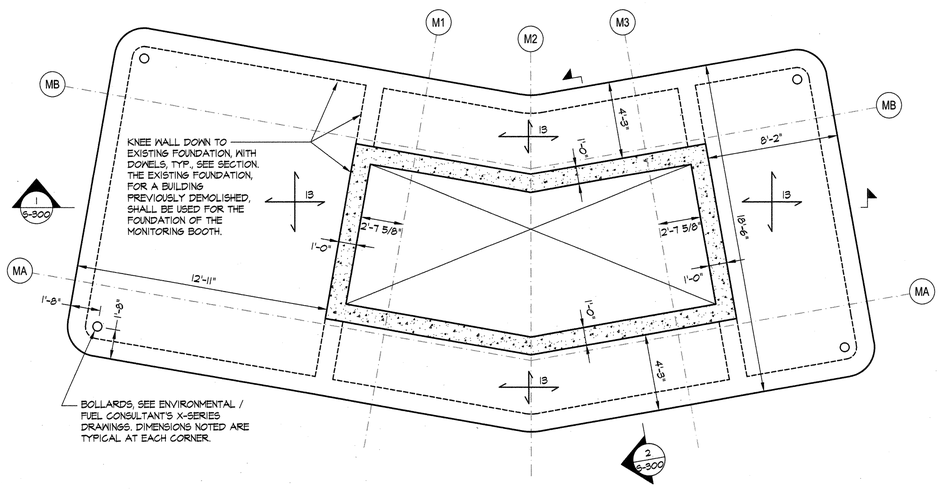

N

NOTE: SEE ROOF PLAN FOR GRID DIMENSIONS.

FOUNDATION PLAN

SCALE: 1/4"=1'-0"

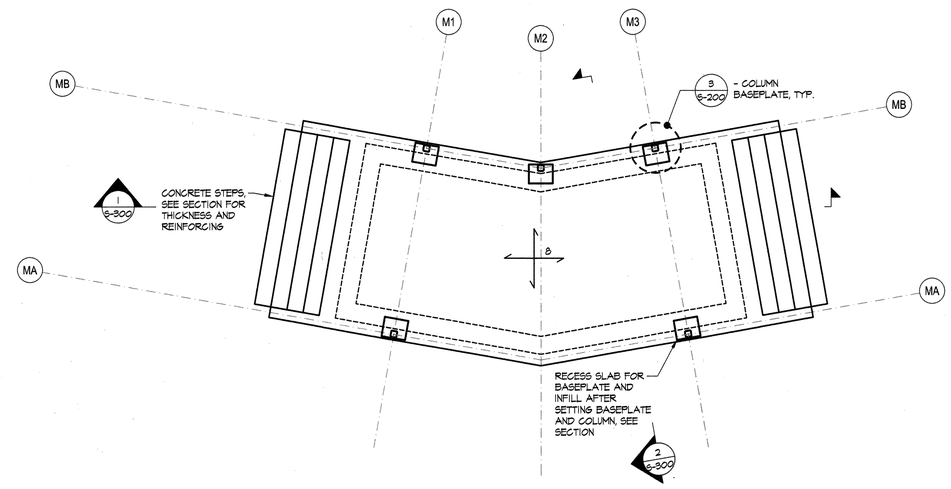

N

NOTE: SEE ROOF PLAN FOR GRID DIMENSIONS.

GROUND FLOOR FRAMING PLAN

SCALE: 1/4"=1'-0"

NOTES:

1. TOP OF "FOUNDATION PLAN" SLAB SHALL BE [-2'-8 3/8"] AND ALL SLOPES SHALL TAPER DOWN TO EXISTING SURFACE. TOP OF "GROUND FLOOR" LEVEL SLAB SHALL BE [-0'-1 1/2"].
2. TOP OF STEEL ELEVATIONS SHALL BE AS FOLLOWS:
   MID-LEVEL: [+6'-1 1/2"]
   ROOF, L.P. : [+9'-4 3/4"]
   ROOF, H.P. : [+11'-2 1/4"]
3. CANTILEVER BEAMS SHALL HAVE THE SAME SIZE AS BACKSPAN.
4. COORDINATE ALL OPENINGS WITH ARCHITECTURAL, MEP, AND ENVIRONMENTAL DRAWINGS.

LEGEND:

- 13 — INDICATES 13" NORMAL WEIGHT CAST-IN-PLACE CONCRETE SLAB WITH EPOXY-COATED #5@12" EACH WAY, TOP & BOTTOM
- INDICATES STEEL TUBE COLUMN, HSS 4x4x3/8, TYP. U.O.N.
- INDICATES TOP / BOTTOM OF HANGER
- INDICATES STEEL FRAMING
- CANT. — INDICATES CANTILEVER BEAM SPAN
- INDICATES SLOPING BEAM, ARROW POINTS DOWNWARD
- INDICATES MOMENT CONNECTION FOR FORCES NOTED ON PLAN
- RD — INDICATES SPAN OF 18 GA. 3" TYPE N METAL ROOF DECK
- INDICATES CONTINUOUS BEAM OVER COLUMN, SEE TYPICAL DETAIL ON S-201.
- 8 — INDICATES 8" NORMAL WEIGHT CAST-IN-PLACE CONCRETE SLAB WITH #5@12" EACH WAY, TOP & BOTTOM, SEE SECTION FOR ADDITIONAL DETAILING INFORMATION.
- INDICATES 12" CONCRETE WALL, REINFORCE WITH #5 @ 12" EACH WAY, EACH FACE, U.O.N.
- INDICATES WALL BELOW

NO UNDERPINNING REQUIRED.

RSA # 13418

NEW YORK CITY DEPARTMENT OF DESIGN + CONSTRUCTION
DIVISION OF STRUCTURES
BUREAU OF ARCHITECTURE & ENGINEERING

PROJECT NAME:
HARPER ST. YARD

32-11 HARPER STREET,
QUEENS, NY 11368
CAPITAL PROJECT NUMBER
HWQF027C

Architect:
nARCHITECTS, PLLC
68 JAY #317
BROOKLYN, NY 11201
T: 718.260.0845 F: 718.260.0847

MEP Engineer:
PLUS GROUP
231 WEST 29th STREET, RM. 706
NEW YORK, NY 10001
T: 212.233.2700 F: 212.233.2727

Structural Engineer:
ROBERT SILMAN ASSOCIATES
88 UNIVERSITY PLACE
NEW YORK, NY 10003
T: 212.620.7970 F: 212.620.8157

Environmental & Fuel Consultant:
URS
77 GOODELL STREET
BUFFALO, NY 14203
T: 716.856.5636 F: 716.856.2545

Code Consultant:
J CALLAHAN CONSULTING INC.
299 BROADWAY SUITE 1420
NEW YORK, NY 10007
T: 212.766.2115 F: 212.766.2787

Date:	Issue:
05.19.10	75% SD
06.02.10	80% SD
11.17.10	100% Schematic Design
02.09.11	100% Design Dev.
04.06.11	75% CD
03.07.12	100% CD
06.06.12	100% CD - Revised
10.12.12	**Bid Set**

Sheet title:
MONITORING BOOTH FRAMING PLANS

Scale:

Seal and Signature:

Date: 03.07.12
Project No.: 0902
Dwg By: MS/EMS
Chk By: EMS/NO

Dwg No:
S-104.00

NOTES:

1. TOP OF NEW SLAB VARIES FROM <+9'-11 ½"> TO <+10'-7 ½"> DUE TO VARIATION IN ELEVATION OF EXISTING GRADE BEAMS, SEE EXPLANATION ON PLAN.
2. EXISTING STRUCTURAL ELEMENTS ARE SHOWN FOR GENERAL INFORMATION ONLY, AND ARE BASED ON LIMITED FIELD MEASUREMENTS AND OBSERVATIONS, SEE GENERAL NOTE #3 ON S-200.

LEGEND:

- INDICATES EXISTING MASONRY BEARING WALL
- (E) INDICATES EXISTING CONCRETE COLUMN
- (E) INDICATES EXISTING STEEL COLUMN TO REMAIN
- INDICATES AREA OF NEW TOPPING / LEVELLING SLAB ON TOP OF EXISTING SLAB ON GRADE, SEE TYPICAL DETAIL ON S-200. (SEE GENERAL NOTES ON S-200 FOR FIBER REINFORCING INFORMATION.) SEE ARCH. DWG. A-002 FOR PHASING OF CONCRETE WORK. (NOTE: THE TOPPING / LEVELLING SLAB SOLUTION MAY NOT MITIGATE THE RISK OF LONG-TERM SETTLEMENT OF THE SLAB ON GRADE, BUT THIS STRATEGY IS THE ACCEPTED DESIGN DIRECTION PER PROJECT MEETING MINUTES AS OF JULY 28, 2010.)
- INDICATES APPROXIMATE ESTIMATED AREA OF CONCRETE / ASPHALT SLAB REMOVAL PER TYPICAL DETAIL ON S-200, AS BASED ON DDC SURVEY DATED 11 FEBRUARY 2010. CONTRACTOR MUST PERFORM A SURVEY OF THE ELEVATIONS IN ORDER TO DETERMINE EXACT EXTENT OF SLAB REMOVAL, PRIOR TO INSTALLATION OF NEW SLAB.
- CJ INDICATES CONTRACTION JOINT, SEE TYPICAL DETAIL ON S-200 FOR FURTHER INFO.

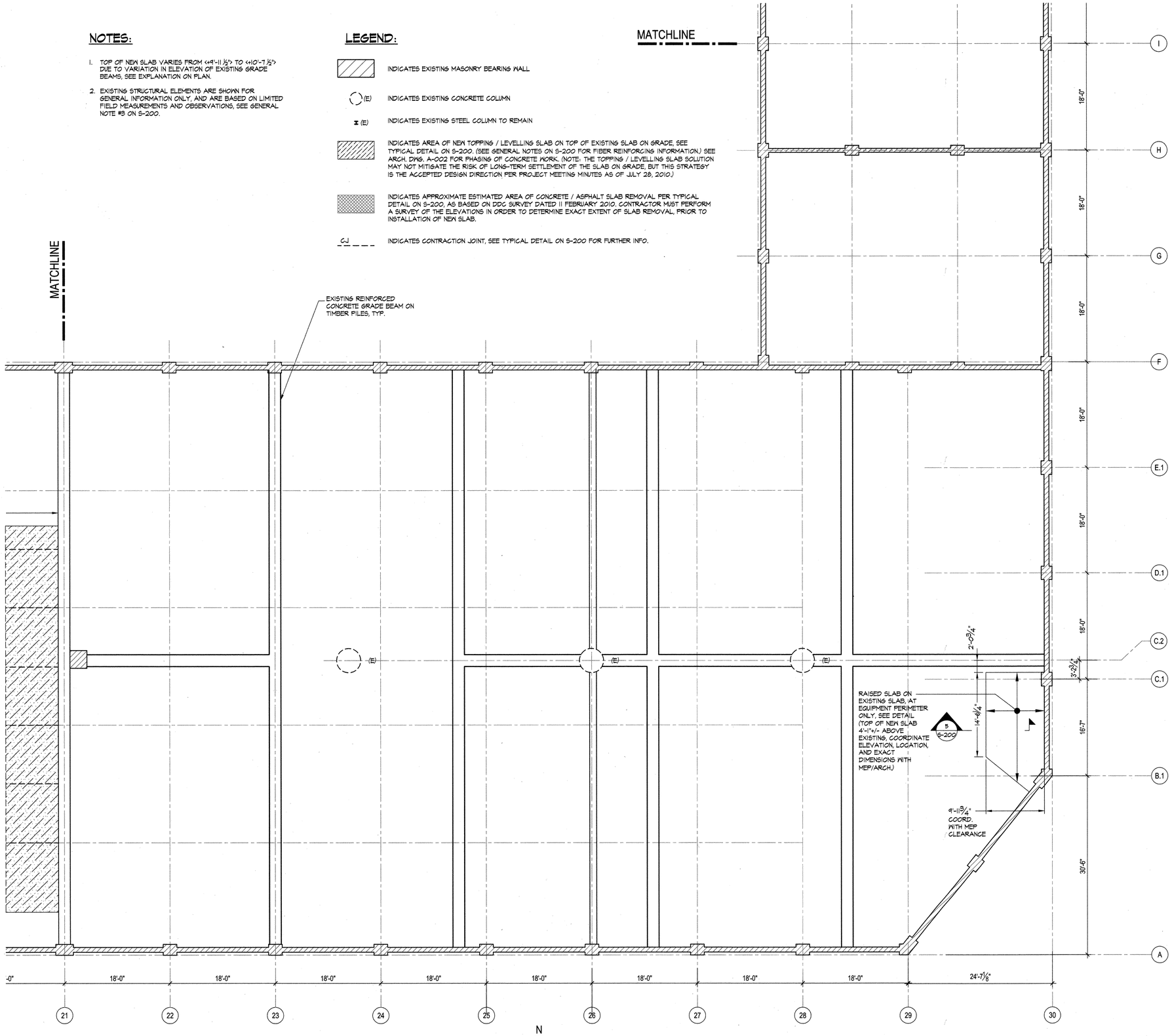

GROUND FLOOR PARTIAL FRAMING PLAN "C"
SCALE: 1/8" = 1'-0"

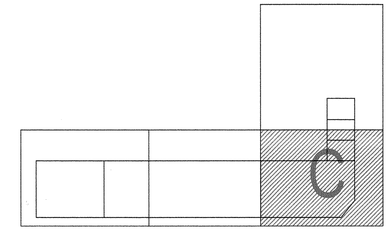

KEY PLAN

NO UNDERPINNING REQUIRED.

RSA # 13418

NEW YORK CITY DEPARTMENT OF DESIGN + CONSTRUCTION
DIVISION OF STRUCTURES
BUREAU OF ARCHITECTURE & ENGINEERING

PROJECT NAME:
HARPER ST. YARD

32-11 HARPER STREET,
QUEENS, NY 11368
CAPITAL PROJECT NUMBER
HWQF027C

Architect:
nARCHITECTS, PLLC
68 JAY #317
BROOKLYN, NY 11201
T: 718.260.0845 F: 718.260.0847

MEP Engineer:
PLUS GROUP
231 WEST 29th STREET, RM. 706
NEW YORK, NY 10001
T: 212.233.2700 F: 212.233.2727

Structural Engineer:
ROBERT SILMAN ASSOCIATES
88 UNIVERSITY PLACE
NEW YORK, NY 10003
T: 212.620.7970 F: 212.620.8157

Environmental & Fuel Consultant:
URS
77 GOODELL STREET
BUFFALO, NY 14203
T: 716.856.5636 F: 716.856.2545

Code Consultant:
J CALLAHAN CONSULTING INC.
299 BROADWAY SUITE 1420
NEW YORK, NY 10007
T: 212.766.2115 F: 212.766.2787

Date:	Issue:
05.19.10	75% SD
06.02.10	80% SD
11.17.10	100% Schematic Design
02.09.11	100% Design Dev.
04.06.11	75% CD
03.07.12	100% CD
06.06.12	100% CD - Revised
10.12.12	**Bid Set**

Sheet title:
GROUND FLOOR FRAMING PLAN "C"

Scale:

Seal and Signature:

Date: 03.07.12
Project No.: 0902
Dwg By: MS/EMS
Chk By: EMS/NO

Dwg No:
S-102.00

NOTES:

1. TOP OF NEW SLAB VARIES FROM <9'-11 1/2"> TO <10'-7 1/2"> DUE TO VARIATION IN ELEVATION OF EXISTING GRADE BEAMS, SEE EXPLANATION ON PLAN.
2. EXISTING STRUCTURAL ELEMENTS ARE SHOWN FOR GENERAL INFORMATION ONLY, AND ARE BASED ON LIMITED FIELD MEASUREMENTS AND OBSERVATIONS, SEE GENERAL NOTE #3 ON S-200.

LEGEND:

- INDICATES EXISTING MASONRY BEARING WALL
- (E) INDICATES EXISTING CONCRETE COLUMN
- (E) INDICATES EXISTING STEEL COLUMN TO REMAIN
- INDICATES AREA OF NEW TOPPING / LEVELLING SLAB ON TOP OF EXISTING SLAB ON GRADE, SEE TYPICAL DETAIL ON S-200. (SEE GENERAL NOTES ON S-200 FOR FIBER REINFORCING INFORMATION.) SEE ARCH. DWG. A-002 FOR PHASING OF CONCRETE WORK. (NOTE: THE TOPPING / LEVELLING SLAB SOLUTION MAY NOT MITIGATE THE RISK OF LONG-TERM SETTLEMENT OF THE SLAB ON GRADE, BUT THIS STRATEGY IS THE ACCEPTED DESIGN DIRECTION PER PROJECT MEETING MINUTES AS OF JULY 28, 2010.)
- INDICATES APPROXIMATE ESTIMATED AREA OF CONCRETE / ASPHALT SLAB REMOVAL PER TYPICAL DETAIL ON S-200, AS BASED ON DDC SURVEY DATED 11 FEBRUARY 2010. CONTRACTOR MUST PERFORM A SURVEY OF THE ELEVATIONS IN ORDER TO DETERMINE EXACT EXTENT OF SLAB REMOVAL, PRIOR TO INSTALLATION OF NEW SLAB.
- CJ INDICATES CONTRACTION JOINT, SEE TYPICAL DETAIL ON S-200 FOR FURTHER INFO.

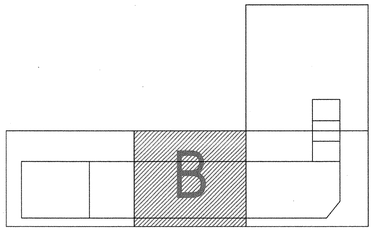

KEY PLAN

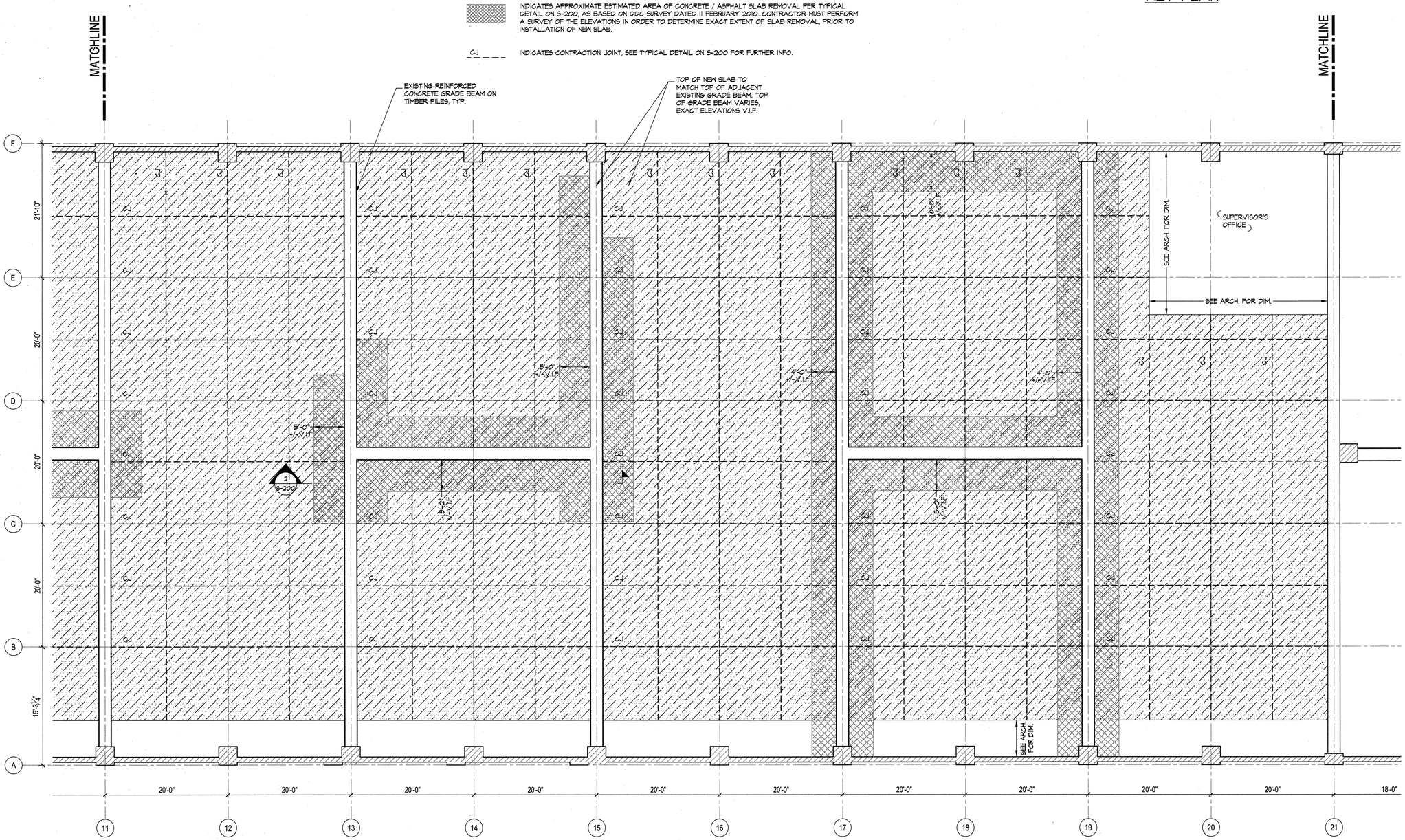

GROUND FLOOR PARTIAL FRAMING PLAN "B"

SCALE: 1/8" = 1'-0"

N

NO UNDERPINNING REQUIRED.

RSA # 13418

NEW YORK CITY DEPARTMENT OF DESIGN + CONSTRUCTION
DIVISION OF STRUCTURES
BUREAU OF ARCHITECTURE & ENGINEERING

PROJECT NAME:
HARPER ST. YARD

32-11 HARPER STREET,
QUEENS, NY 11368
CAPITAL PROJECT NUMBER
HWQF027C

Architect:
nARCHITECTS, PLLC
68 JAY #317
BROOKLYN, NY 11201
T: 718.260.0845 F: 718.260.0847

MEP Engineer:
PLUS GROUP
231 WEST 29th STREET, RM. 706
NEW YORK, NY 10001
T: 212.233.2700 F: 212.233.2727

Structural Engineer:
ROBERT SILMAN ASSOCIATES
88 UNIVERSITY PLACE
NEW YORK, NY 10003
T: 212.620.7970 F: 212.620.8157

Environmental & Fuel Consultant:
URS
77 GOODELL STREET
BUFFALO, NY 14203
T: 716.856.5636 F: 716.856.2545

Code Consultant:
J CALLAHAN CONSULTING INC.
299 BROADWAY SUITE 1420
NEW YORK, NY 10007
T: 212.766.2115 F: 212.766.2787

Date:	Issue:
05.19.10	75% SD
06.02.10	80% SD
11.17.10	100% Schematic Design
02.09.11	100% Design Dev.
04.06.11	75% CD
03.07.12	100% CD
06.06.12	100% CD - Revised
10.12.12	**Bid Set**

Sheet title:
GROUND FLOOR FRAMING PLAN "B"

Scale:

Seal and Signature:

Date: 03.07.12
Project No.: 0902
Dwg By: MS/EMS
Chk By: EMS/NO

Dwg No:
S-101.00

NOTES:

1. TOP OF NEW SLAB VARIES FROM <+9'-11 1/2"> TO <+10'-7 1/2"> DUE TO VARIATION IN ELEVATION OF EXISTING GRADE BEAMS, SEE EXPLANATION ON PLAN.
2. EXISTING STRUCTURAL ELEMENTS ARE SHOWN FOR GENERAL INFORMATION ONLY, AND ARE BASED ON LIMITED FIELD MEASUREMENTS AND OBSERVATIONS, SEE GENERAL NOTE #3 ON S-200.

LEGEND:

INDICATES EXISTING MASONRY BEARING WALL

(E) INDICATES EXISTING CONCRETE COLUMN

(E) INDICATES EXISTING STEEL COLUMN TO REMAIN

INDICATES AREA OF NEW TOPPING / LEVELLING SLAB ON TOP OF EXISTING SLAB ON GRADE, SEE TYPICAL DETAIL ON S-200. (SEE GENERAL NOTES ON S-200 FOR FIBER REINFORCING INFORMATION.) SEE ARCH. DWG. A-002 FOR PHASING OF CONCRETE WORK. (NOTE: THE TOPPING / LEVELLING SLAB SOLUTION MAY NOT MITIGATE THE RISK OF LONG-TERM SETTLEMENT OF THE SLAB ON GRADE, BUT THIS STRATEGY IS THE ACCEPTED DESIGN DIRECTION PER PROJECT MEETING MINUTES AS OF JULY 28, 2010.)

INDICATES APPROXIMATE ESTIMATED AREA OF CONCRETE / ASPHALT SLAB REMOVAL PER TYPICAL DETAIL ON S-200, AS BASED ON DDC SURVEY DATED 11 FEBRUARY 2010. CONTRACTOR MUST PERFORM A SURVEY OF THE ELEVATIONS IN ORDER TO DETERMINE EXACT EXTENT OF SLAB REMOVAL, PRIOR TO INSTALLATION OF NEW SLAB.

CJ INDICATES CONTRACTION JOINT, SEE TYPICAL DETAIL ON S-200 FOR FURTHER INFO.

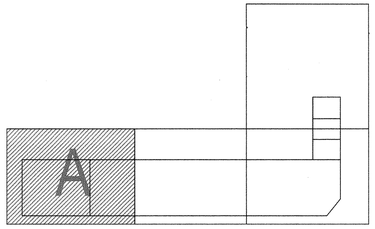

KEY PLAN

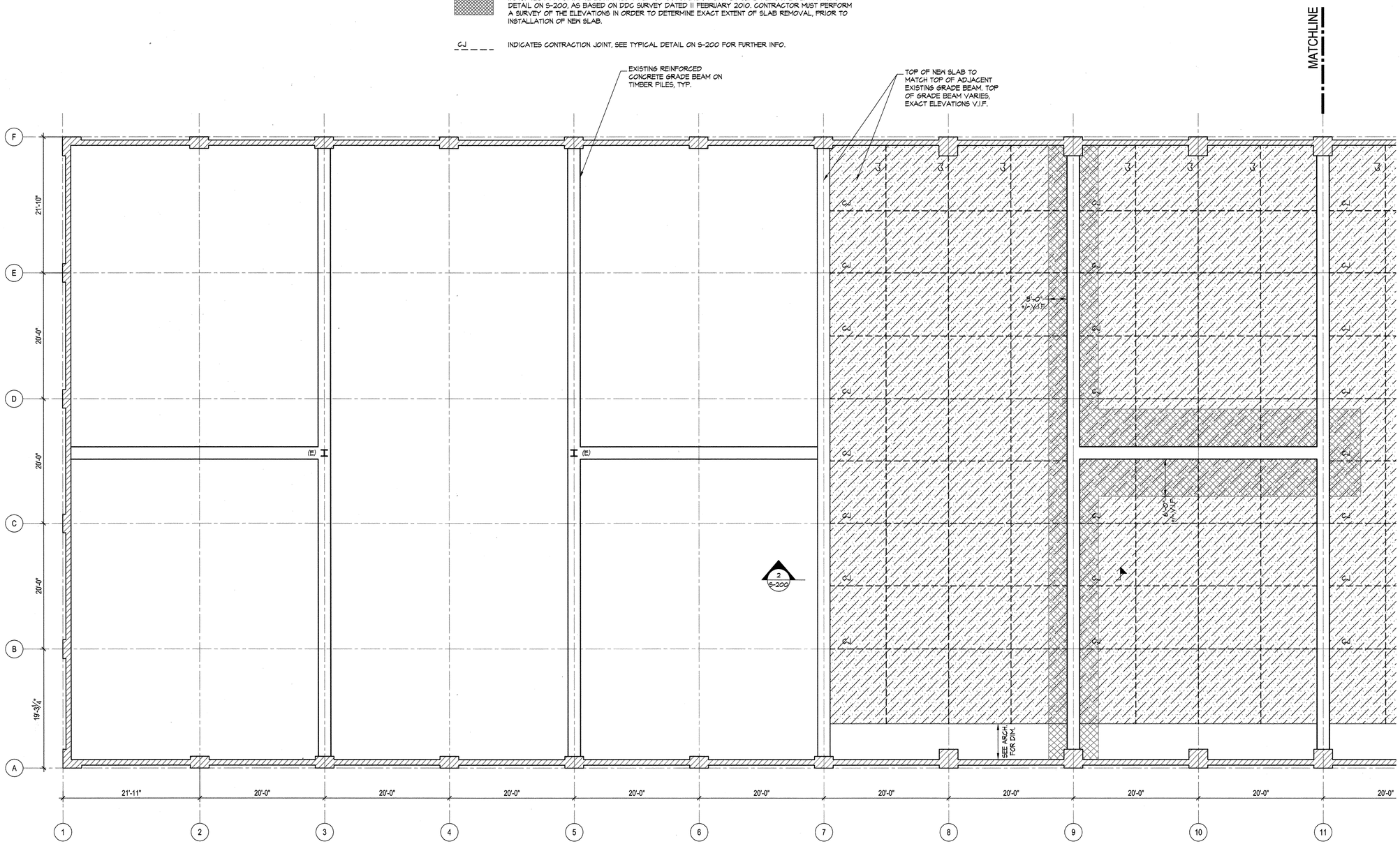

GROUND FLOOR PARTIAL FRAMING PLAN "A"
SCALE: 1/8" = 1'-0"

N

NO UNDERPINNING REQUIRED.

RSA # 13418

DDC
NEW YORK CITY DEPARTMENT OF DESIGN + CONSTRUCTION
DIVISION OF STRUCTURES
BUREAU OF ARCHITECTURE & ENGINEERING

PROJECT NAME:
HARPER ST. YARD

32-11 HARPER STREET,
QUEENS, NY 11368
CAPITAL PROJECT NUMBER
HWQF027C

Architect:
nARCHITECTS, PLLC
68 JAY #317
BROOKLYN, NY 11201
T: 718.260.0845 F: 718.260.0847

MEP Engineer:
PLUS GROUP
231 WEST 29th STREET, RM. 706
NEW YORK, NY 10001
T: 212.233.2700 F: 212.233.2727

Structural Engineer:
ROBERT SILMAN ASSOCIATES
88 UNIVERSITY PLACE
NEW YORK, NY 10003
T: 212.620.7970 F: 212.620.8157

Environmental & Fuel Consultant:
URS
77 GOODELL STREET
BUFFALO, NY 14203
T: 716.856.5636 F: 716.856.2545

Code Consultant:
J CALLAHAN CONSULTING INC.
299 BROADWAY SUITE 1420
NEW YORK, NY 10007
T: 212.766.2115 F: 212.766.2787

Date:	Issue:
05.19.10	75% SD
06.02.10	80% SD
11.17.10	100% Schematic Design
02.09.11	100% Design Dev.
04.06.11	75% CD
03.07.12	100% CD
06.06.12	100% CD - Revised
10.12.12	**Bid Set**

Sheet title:
GROUND FLOOR FRAMING PLAN "A"

Scale:

Seal and Signature:

Date: 03.07.12
Project No.: 0902
Dwg By: MS/EMS
Chk By: EMS/NO

Dwg No:
S-100.00

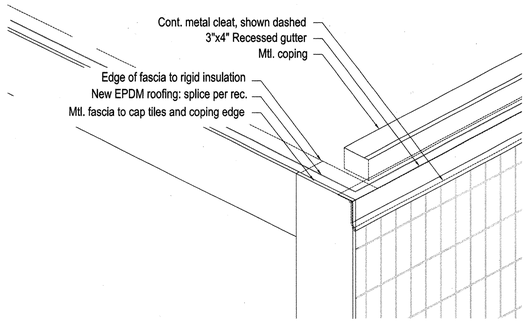

1 AXO DTL. AT GUTTER EDGE

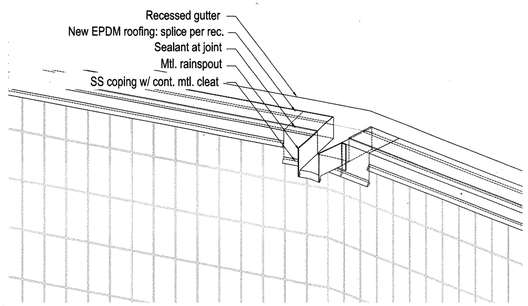

2 AXO DTL. AT SCUPPER

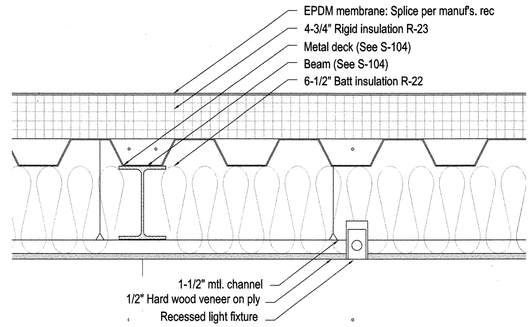

3 SECTION ALONG CEILING
1 1/2" = 1'-0"

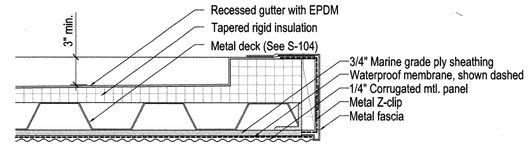

3 SECTION DTL. AT GUTTER
1 1/2" = 1'-0"

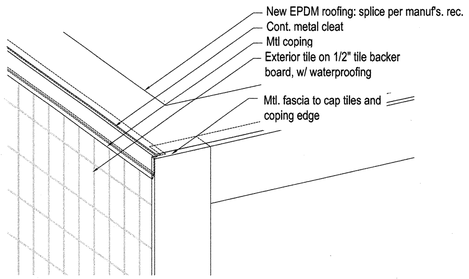

5 AXO DTL. AT ROOF EDGE

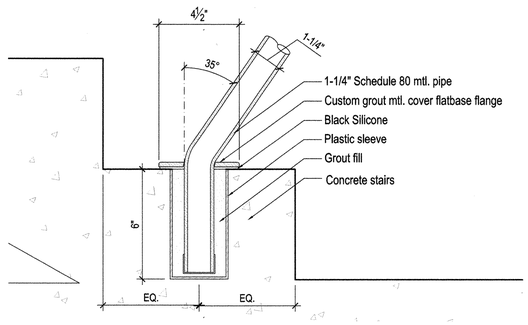

6 SECTION DTL. HANDRAIL
3" = 1'-0"

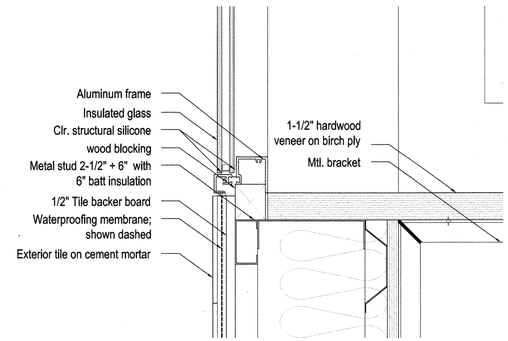

7 SECTION DTL. AT FIXED WINDOW
3" = 1'-0"

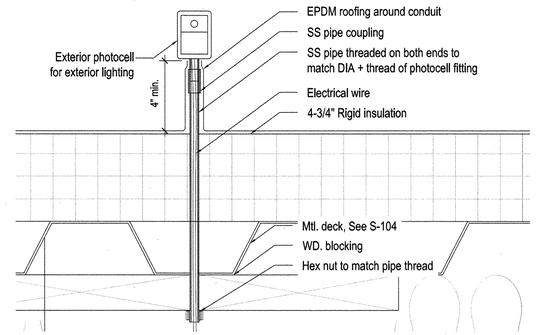

8 SECTION DTL AT PHOTOCELL ROOF PENETRATION
3" = 1'-0"

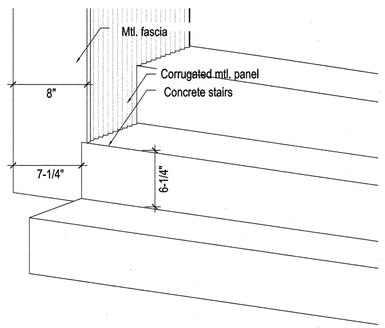

9 AXO AT STAIRS BOTTOM CORNER
N.T.S.

NEW YORK CITY DEPARTMENT OF DESIGN + CONSTRUCTION
DIVISION OF STRUCTURES
BUREAU OF ARCHITECTURE & ENGINEERING

PROJECT NAME:
HARPER ST. YARD

32-11 HARPER STREET,
QUEENS, NY 11368
CAPITAL PROJECT NUMBER
HWQF027C

Architect:
nARCHITECTS, PLLC
68 JAY #317
BROOKLYN, NY 11201
T: 718.260.0845 F: 718.260.0847

MEP Engineer:
PLUS GROUP
231 WEST 29th STREET, RM. 706
NEW YORK, NY 10001
T: 212.233.2700 F: 212.233.2727

Structural Engineer:
ROBERT SILMAN ASSOCIATES
88 UNIVERSITY PLACE
NEW YORK, NY 10003
T: 212.620.7970 F: 212.620.8157

Environmental & Fuel Consultant:
URS
77 GOODELL STREET
BUFFALO, NY 14203
T: 716.856.5636 F: 716.856.2545

Code Consultant:
J CALLAHAN CONSULTING INC.
299 BROADWAY SUITE 1420
NEW YORK, NY 10007
T: 212.766.2115 F: 212.766.2787

Date:	Issue:
05.19.10	75% SD
06.02.10	80% SD
11.17.10	100% Schematic Design
02.09.11	100% Design Dev.
04.06.11	75% CD
03.07.12	100% CD
06.06.12	100% CD - Revised
10.12.12	**Bid Set**

Sheet title:
MONITORING BOOTH PLAN & SECTION DETAILS
Scale: As Noted

Seal and Signature:

Date: 09.28.12
Project No.: 0902
Dwg By: MP
Chk By: MH

Dwg No:
A-505.00

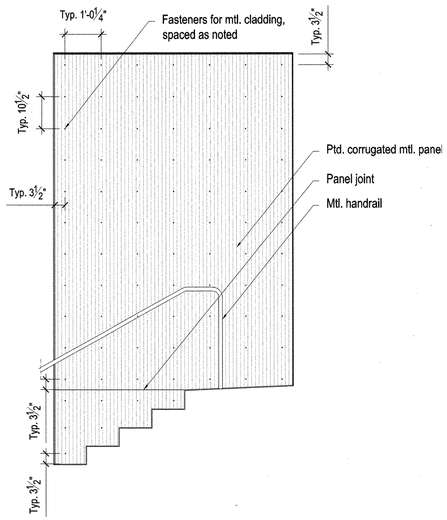

1 MON. BOOTH NORTH PORCH ELEV.
3/8" = 1'-0"

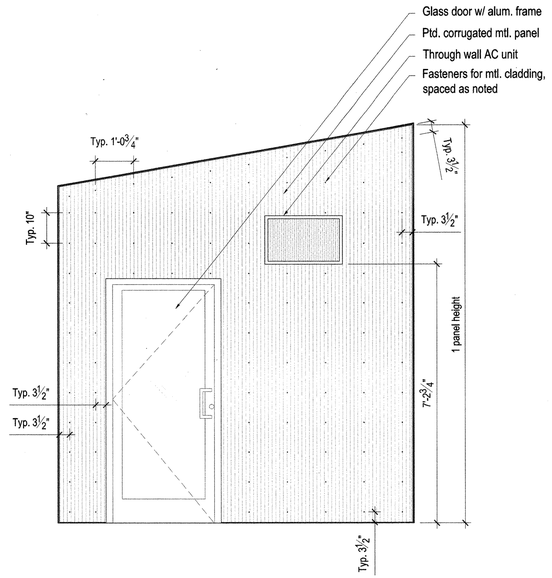

2 MON. BOOTH NORTH PORCH ELEV.
3/8" = 1'-0"

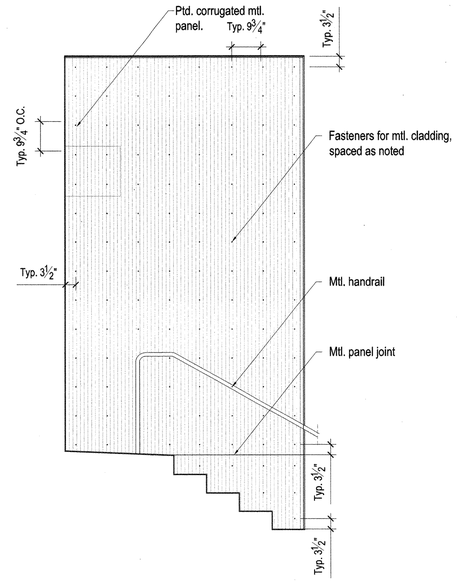

3 MON. BOOTH NORTH PORCH ELEV.
3/8" = 1'-0"

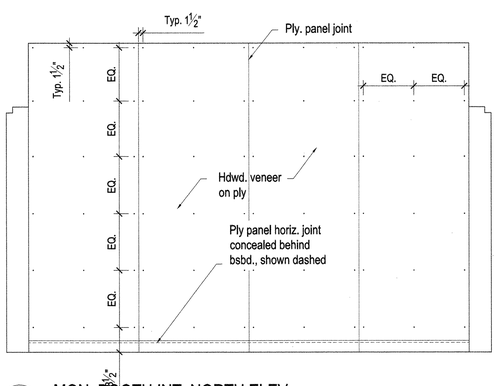

4 MON. BOOTH INT. NORTH ELEV.
3/8" = 1'-0"

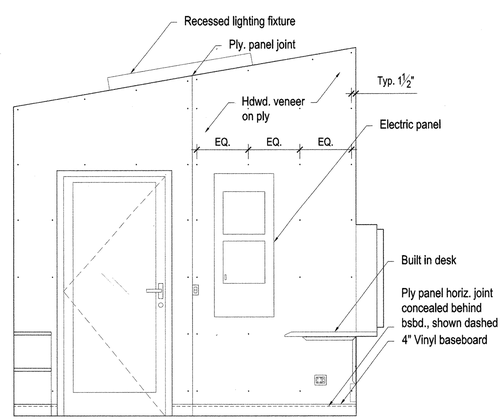

5 MON. BOOTH INT. EAST ELEV.
3/8" = 1'-0"

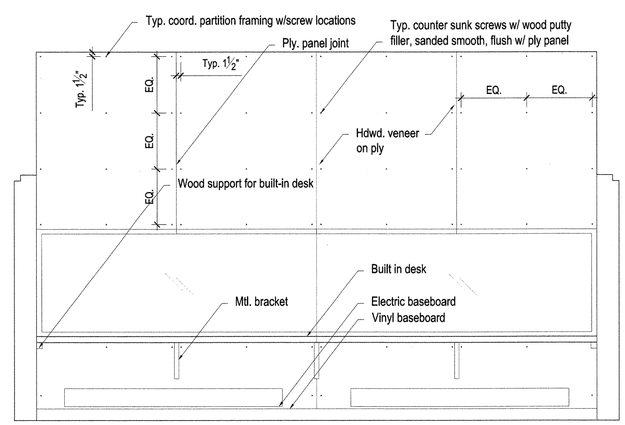

6 MON. BOOTH INT. SOUTH ELEV.
3/8" = 1'-0"

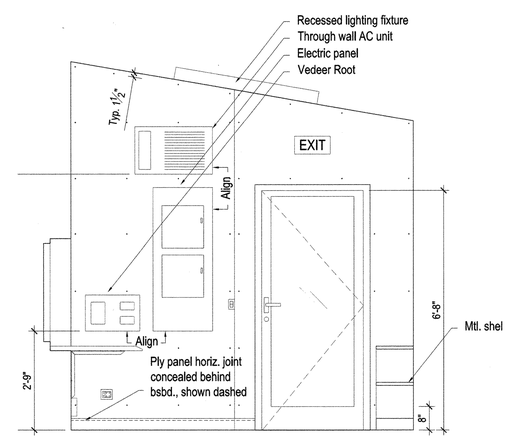

7 MON. BOOTH INT. WEST ELEV.
3/8" = 1'-0"

KEY PLAN AREA

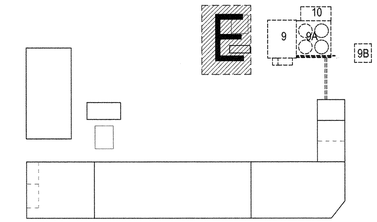

NEW YORK CITY DEPARTMENT OF DESIGN + CONSTRUCTION
DIVISION OF STRUCTURES
BUREAU OF ARCHITECTURE & ENGINEERING

PROJECT NAME:
HARPER ST. YARD

32-11 HARPER STREET,
QUEENS, NY 11368
CAPITAL PROJECT NUMBER
HWQF027C

Architect:
nARCHITECTS, PLLC
68 JAY #317
BROOKLYN, NY 11201
T: 718.260.0845 F: 718.260.0847

MEP Engineer:
PLUS GROUP
231 WEST 29th STREET, RM. 706
NEW YORK, NY 10001
T: 212.233.2700 F: 212.233.2727

Structural Engineer:
ROBERT SILMAN ASSOCIATES
88 UNIVERSITY PLACE
NEW YORK, NY 10003
T: 212.620.7970 F: 212.620.8157

Environmental & Fuel Consultant:
URS
77 GOODELL STREET
BUFFALO, NY 14203
T: 716.856.5636 F: 716.856.2545

Code Consultant:
J CALLAHAN CONSULTING INC.
299 BROADWAY SUITE 1420
NEW YORK, NY 10007
T: 212.766.2115 F: 212.766.2787

Date:	Issue:
05.19.10	75% SD
06.02.10	80% SD
11.17.10	100% Schematic Design
02.09.11	100% Design Dev.
04.06.11	75% CD
03.07.12	100% CD
06.06.12	100% CD - Revised
10.12.12	**Bid Set**

Sheet title:
MONITORING BOOTH INTERIOR ELEV.

Scale: AS NOTED

Seal and Signature:

Date: 09.28.12
Project No.: 0902
Dwg By: MP
Chk By: MH

Dwg No:
A-503.00

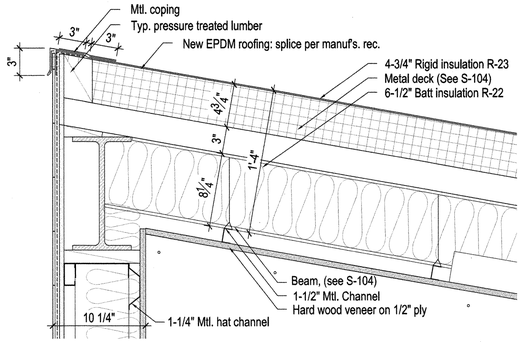

1 SECTION DTL. AT ROOF
1 1/2" = 1'-0"

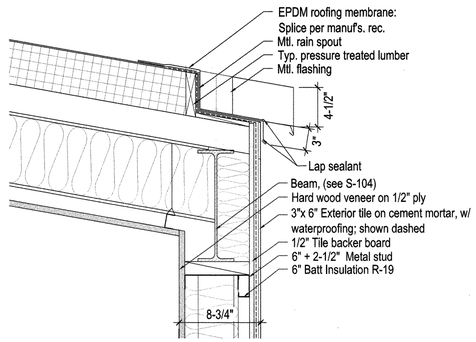

2 SECTION DTL. AT SCUPPER
1 1/2" = 1'-0"

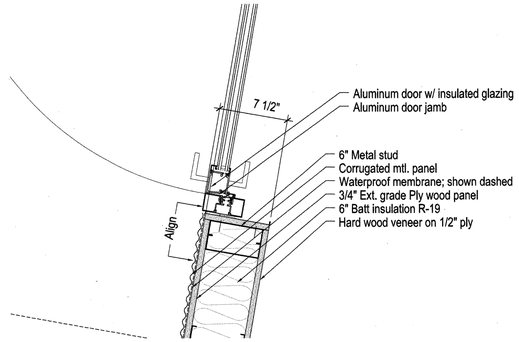

3 PLAN DTL. AT DOOR
1 1/2" = 1'-0"

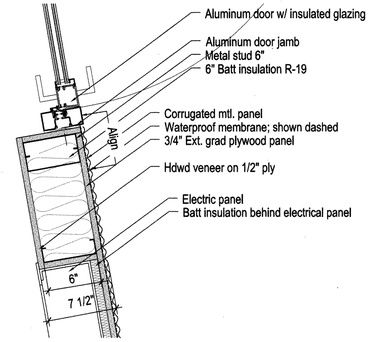

4 PLAN DTL. AT DOOR
1 1/2" = 1'-0"

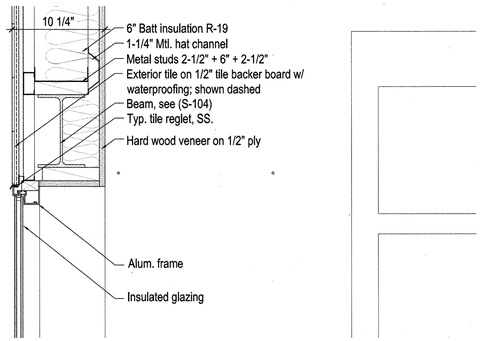

5 SECTION DTL. AT FIXED WINDOW
1 1/2" = 1'-0"

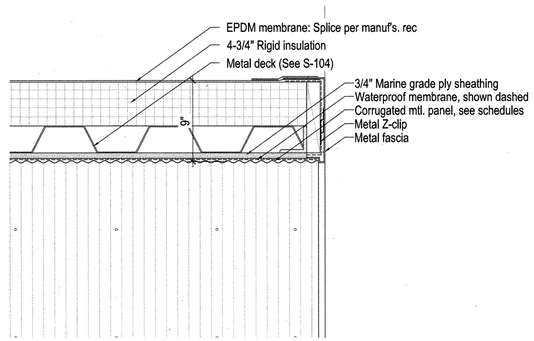

6 SECTION DTL. ROOF OVERHANG
1 1/2" = 1'-0"

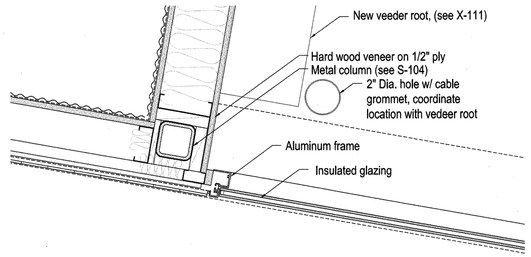

7 PLAN DTL. AT FIXED WINDOW
1 1/2" = 1'-0"

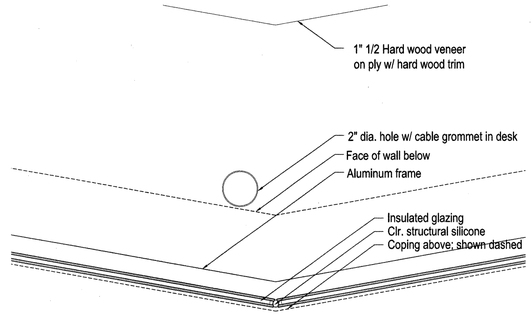

8 PLAN DTL. AT MAT SLAB
1 1/2" = 1'-0"

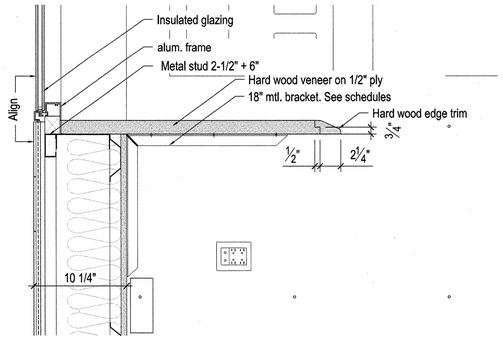

9 SECTION DTL. AT FIXED WINDOW
1 1/2" = 1'-0"

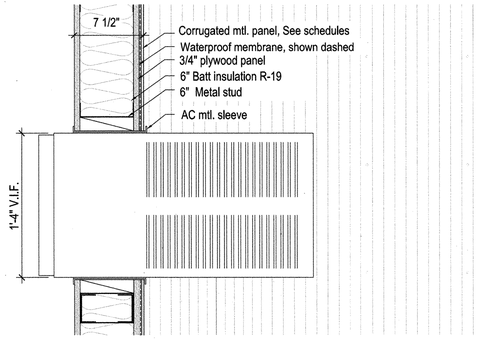

10 AC SECTION DTL.
1 1/2" = 1'-0"

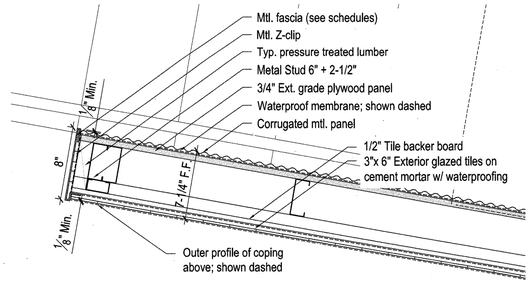

11 PLAN DTL. AT PORCH
1 1/2" = 1'-0"

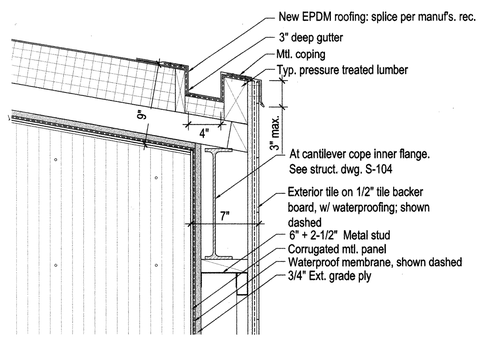

12 SEC. DTL. AT PORCH GUTTER
1 1/2" = 1'-0"

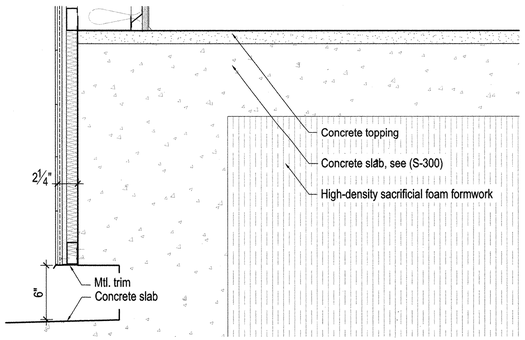

13 SECTION DTL.
1 1/2" = 1'-0"

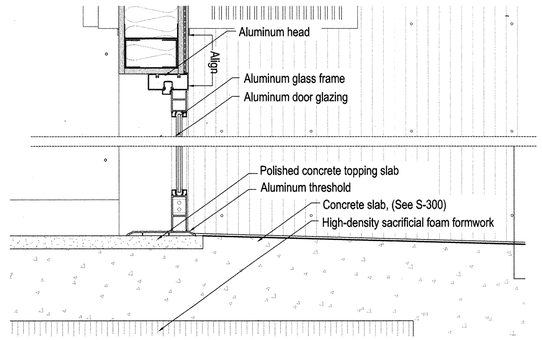

14 SECTION DTL.
1 1/2" = 1'-0"

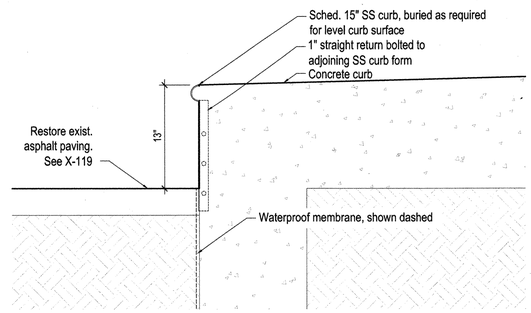

15 CURB DTL.
1 1/2" = 1'-0"

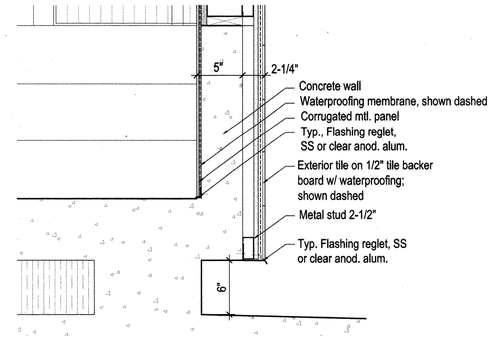

16 SECTION DTL. AT PORCH WALL
1 1/2" = 1'-0"

NEW YORK CITY DEPARTMENT OF DESIGN + CONSTRUCTION
DIVISION OF STRUCTURES
BUREAU OF ARCHITECTURE
& ENGINEERING

PROJECT NAME:
HARPER ST. YARD

32-11 HARPER STREET,
QUEENS, NY 11368
CAPITAL PROJECT NUMBER
HWQF027C

Architect:
nARCHITECTS, PLLC
68 JAY #317
BROOKLYN, NY 11201
T: 718.260.0845 F: 718.260.0847

MEP Engineer:
PLUS GROUP
231 WEST 29th STREET, RM. 706
NEW YORK, NY 10001
T: 212.233.2700 F: 212.233.2727

Structural Engineer:
ROBERT SILMAN ASSOCIATES
88 UNIVERSITY PLACE
NEW YORK, NY 10003
T: 212.620.7970 F: 212.620.8157

Environmental & Fuel Consultant:
URS
77 GOODELL STREET
BUFFALO, NY 14203
T: 716.856.5636 F: 716.856.2545

Code Consultant:
J CALLAHAN CONSULTING INC.
299 BROADWAY SUITE 1420
NEW YORK, NY 10007
T: 212.766.2115 F: 212.766.2787

Date:	Issue:
05.19.10	75% SD
06.02.10	80% SD
11.17.10	100% Schematic Design
02.09.11	100% Design Dev.
04.06.11	75% CD
03.07.12	100% CD
06.06.12	100% CD - Revised
10.12.12	**Bid Set**

Sheet title:
MONITORING BOOTH
PLAN & SECTION
DETAILS
Scale: 1 1/2"

Seal and Signature:
REGISTERED ARCHITECT
Minh-Ha Tram Chu Hoang
030935
STATE OF NEW YORK

Date: 09.28.12
Project No.: 0902
Dwg By: MP
Chk By: MH

Dwg No:
A-504.00

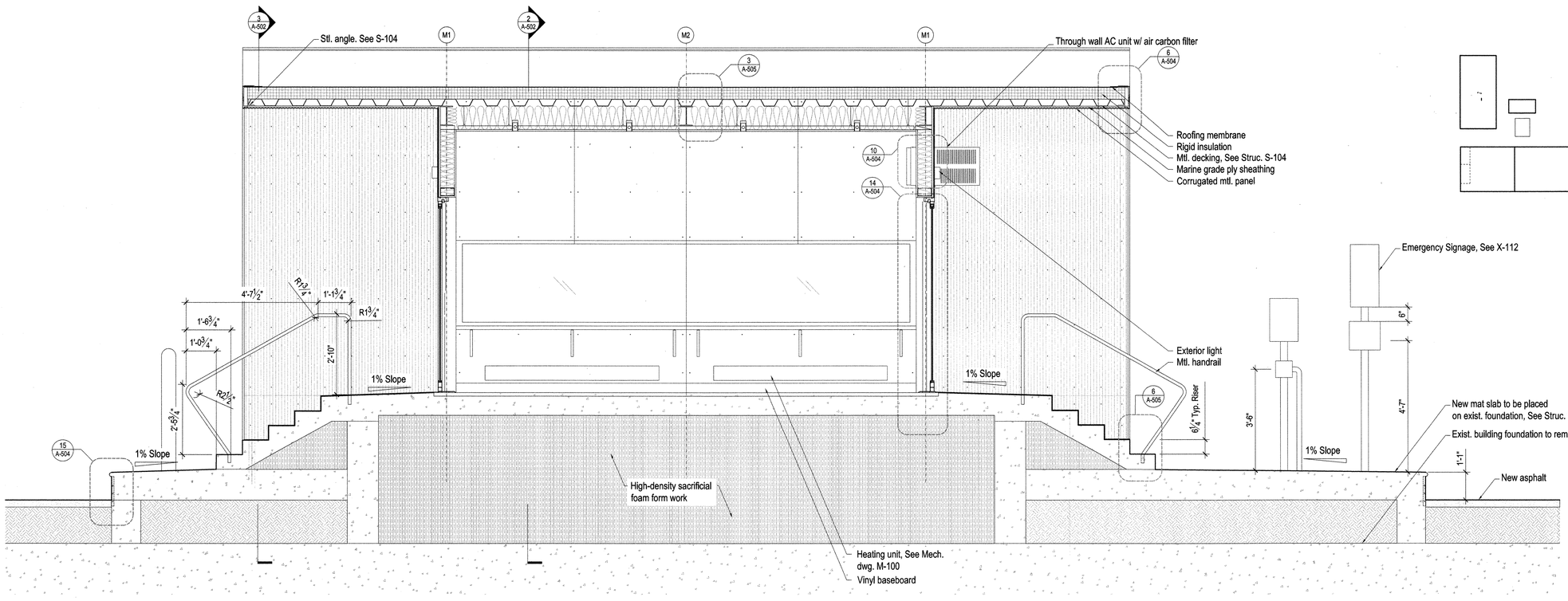

1 MONITORING BOOTH LONG SECTION
1/2" = 1'-0"

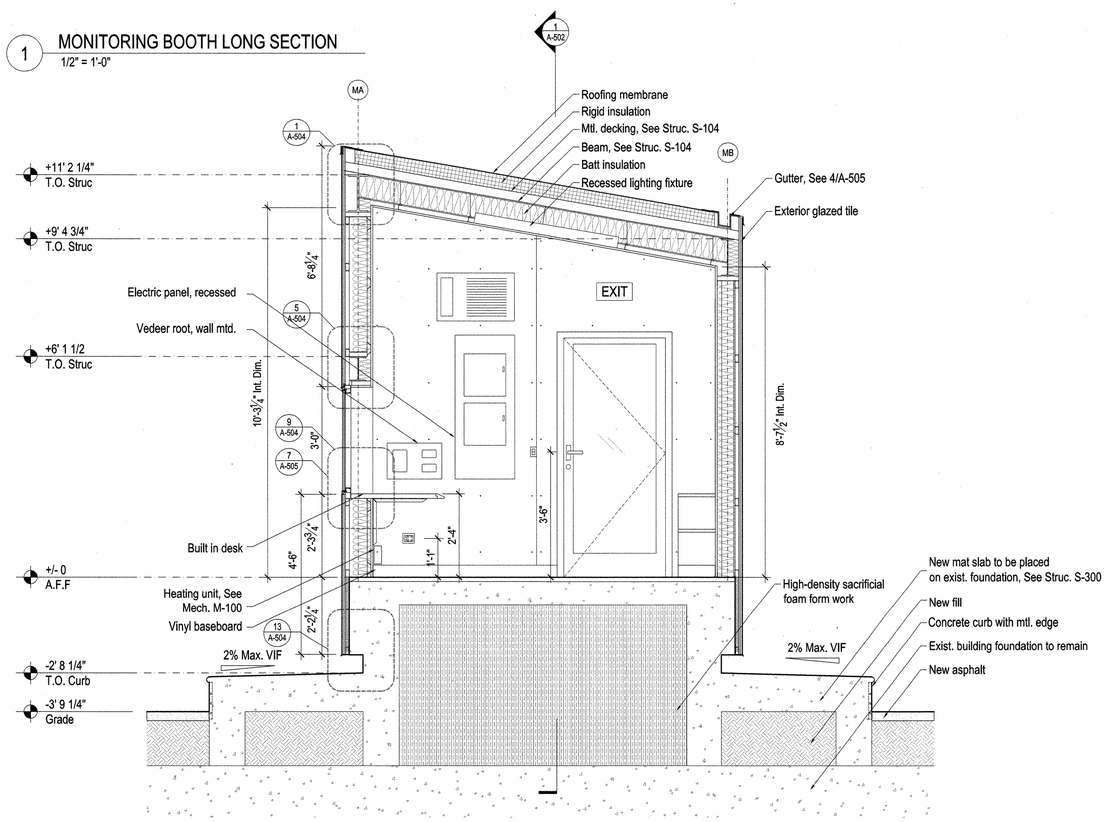

2 MONITORING BOOTH CROSS SECTION
1/2" = 1'-0"

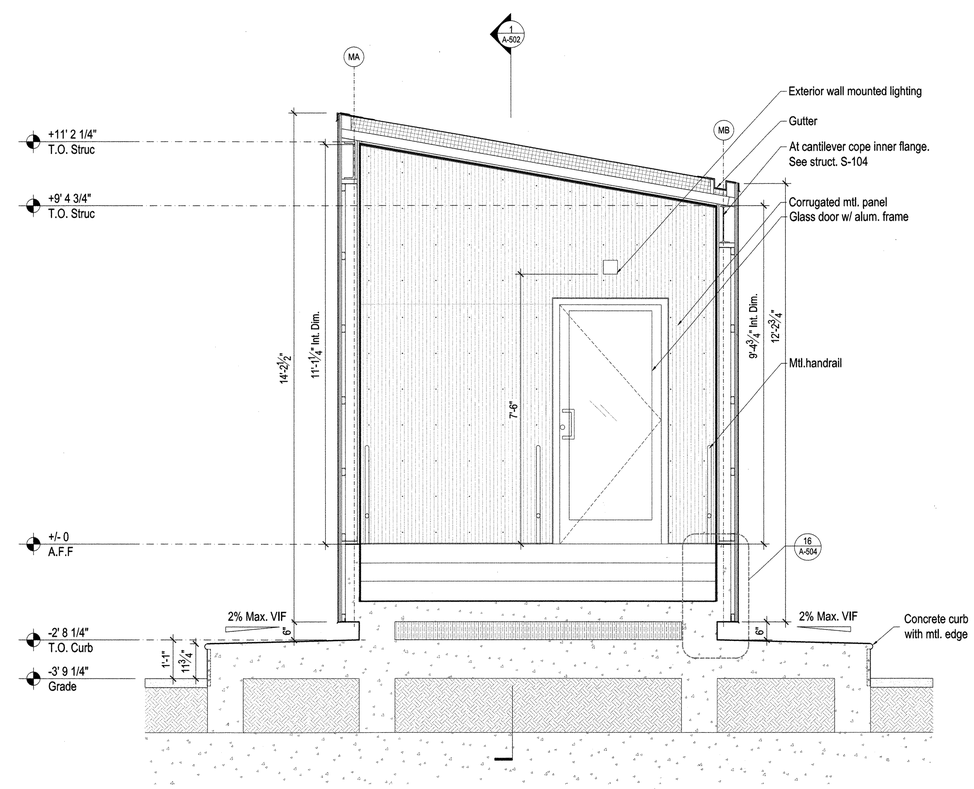

3 MONITORING BOOTH CROSS SECTION
1/2" = 1'-0"

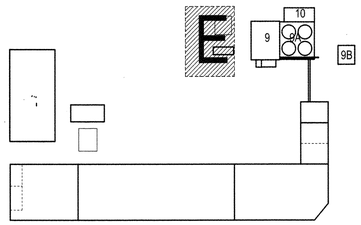

NEW YORK CITY DEPARTMENT OF DESIGN + CONSTRUCTION
DIVISION OF STRUCTURES
BUREAU OF ARCHITECTURE & ENGINEERING

PROJECT NAME:
HARPER ST. YARD

32-11 HARPER STREET,
QUEENS, NY 11368
CAPITAL PROJECT NUMBER
HWQF027C

Architect:
nARCHITECTS, PLLC
68 JAY #317
BROOKLYN, NY 11201
T: 718.260.0845 F: 718.260.0847

MEP Engineer:
PLUS GROUP
231 WEST 29th STREET, RM. 706
NEW YORK, NY 10001
T: 212.233.2700 F: 212.233.2727

Structural Engineer:
ROBERT SILMAN ASSOCIATES
88 UNIVERSITY PLACE
NEW YORK, NY 10003
T: 212.620.7970 F: 212.620.8157

Environmental & Fuel Consultant:
URS
77 GOODELL STREET
BUFFALO, NY 14203
T: 716.856.5636 F: 716.856.2545

Code Consultant:
J CALLAHAN CONSULTING INC.
299 BROADWAY SUITE 1420
NEW YORK, NY 10007
T: 212.766.2115 F: 212.766.2787

Date:	Issue:
05.19.10	75% SD
06.02.10	80% SD
11.17.10	100% Schematic Design
02.09.11	100% Design Dev.
04.06.11	75% CD
03.07.12	100% CD
06.06.12	100% CD - Revised
10.12.12	**Bid Set**

Sheet title:
MONITORING BOOTH SECTIONS

Scale: AS NOTED

Seal and Signature:

Date: 09.28.12
Project No.: 0902
Dwg By: MP
Chk By: MH

Dwg No:
A-502.00

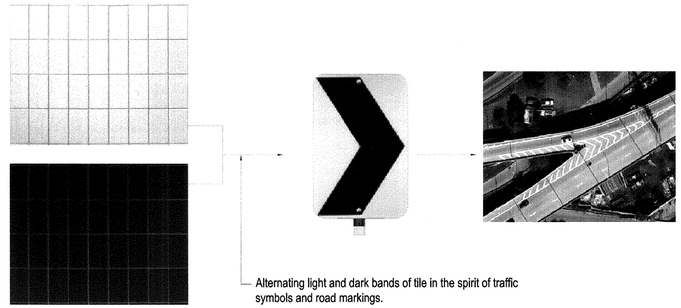

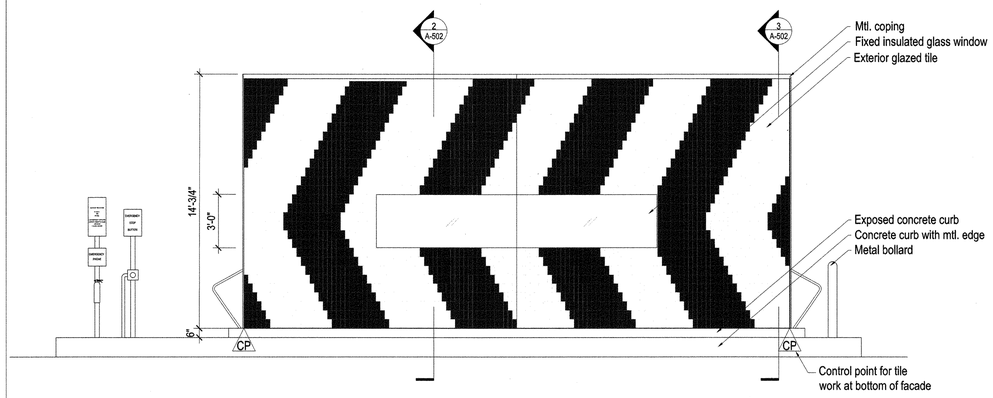

1 MONITORING BOOTH SOUTH ELEVATION
1/4"=1'-0

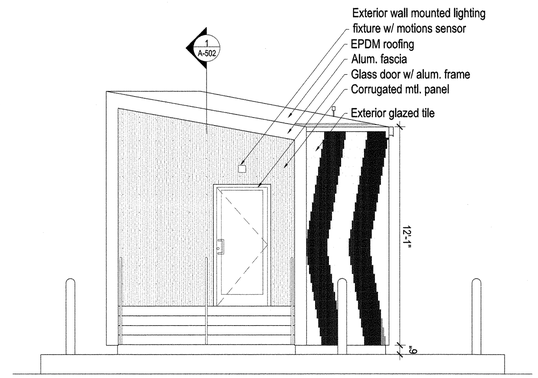

2 MONITORING BOOTH EAST ELEVATION
1/4"=1'-0

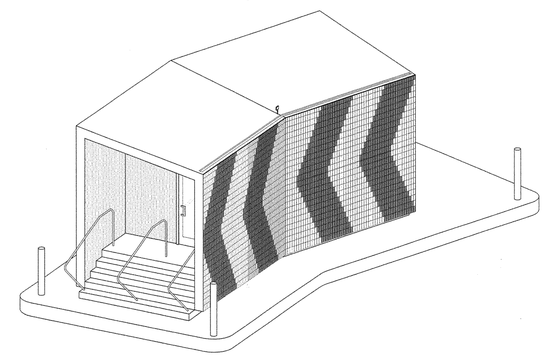

3 MONITORING BOOTH AXO- SOUTH

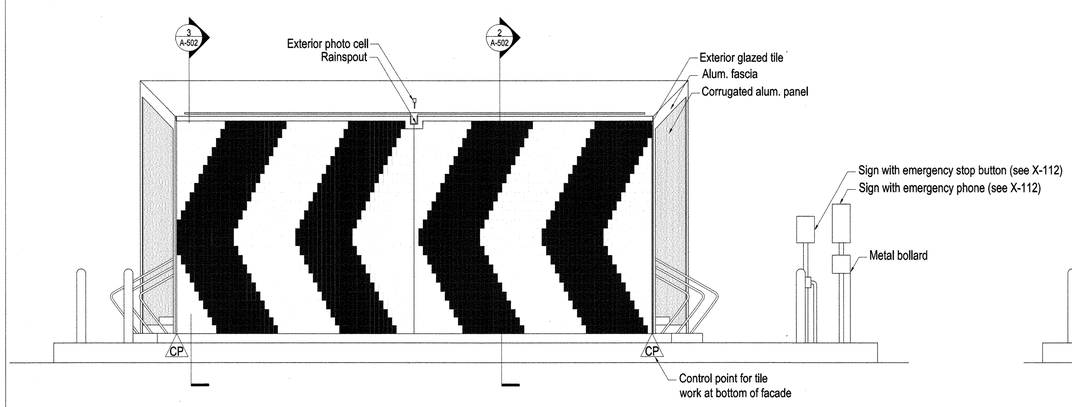

4 MONITORING BOOTH NORTH ELEVATION
1/4"=1'-0

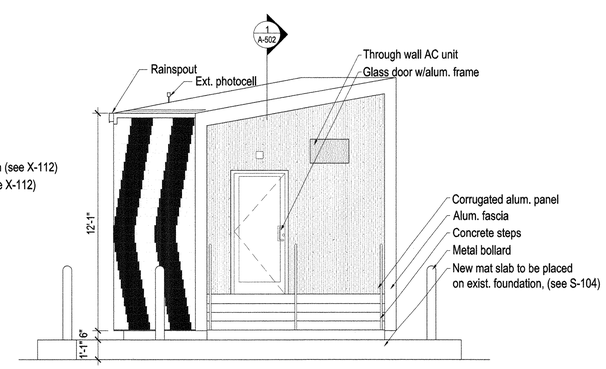

5 MONITORING BOOTH WEST ELEVATION
1/4"=1'-0

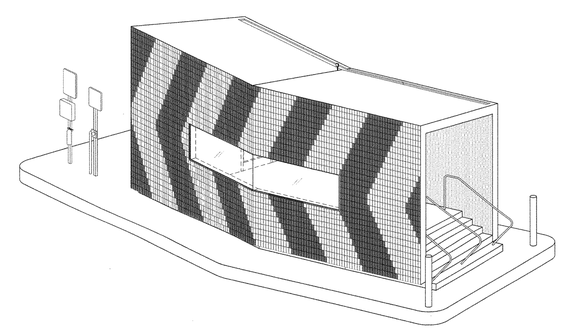

6 MONITORING BOOTH AXO- NORTH

0 8' 16'

KEY PLAN AREA

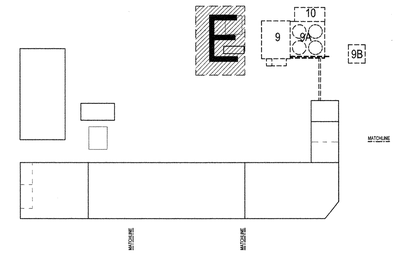

NEW YORK CITY DEPARTMENT OF DESIGN + CONSTRUCTION
DIVISION OF STRUCTURES
BUREAU OF ARCHITECTURE & ENGINEERING

PROJECT NAME:
HARPER ST. YARD

32-11 HARPER STREET,
QUEENS, NY 11368
CAPITAL PROJECT NUMBER
HWQF027C

Architect:
nARCHITECTS, PLLC
68 JAY #317
BROOKLYN, NY 11201
T: 718.260.0845 F: 718.260.0847

MEP Engineer:
PLUS GROUP
231 WEST 29th STREET, RM. 706
NEW YORK, NY 10001
T: 212.233.2700 F: 212.233.2727

Structural Engineer:
ROBERT SILMAN ASSOCIATES
88 UNIVERSITY PLACE
NEW YORK, NY 10003
T: 212.620.7970 F: 212.620.8157

Environmental & Fuel Consultant:
URS
77 GOODELL STREET
BUFFALO, NY 14203
T: 716.856.5636 F: 716.856.2545

Code Consultant:
J CALLAHAN CONSULTING INC.
299 BROADWAY SUITE 1420
NEW YORK, NY 10007
T: 212.766.2115 F: 212.766.2787

Date:	Issue:
05.19.10	75% SD
06.02.10	80% SD
11.17.10	100% Schematic Design
02.09.11	100% Design Dev.
04.06.11	75% CD
03.07.12	100% CD
06.06.12	100% CD - Revised
10.12.12	**Bid Set**

Sheet title:
MONITORING BOOTH ELEVATIONS & AXOS

Scale: 1/4" = 1'-0"

Seal and Signature:
REGISTERED ARCHITECT
Minh HaTram Chu Huang
030935
STATE OF NEW YORK

Date: 09.28.12
Project No.: 0902
Dwg By: MP
Chk By: MH

Dwg No:
A-501.00

FIRST FLOOR PLAN NOTES

1. CONTRACTOR SHALL BE RESPONSIBLE FOR COORDINATING THE WORK OF ALL TRADES AND SUBCONTRACTORS.

LIGHTING DRAWING KEY

- New LED linear recessed fixture
- New LED linear recessed fixture with emergency battery ballast
- New exterior wall mounted LED fixture
- Double LED cobra head mounted on DOT cobra pole

FLOOR PLAN DRAWING KEY

- Exist. wall
- New construction
- Exist. door to remain
- New door

FLOOR FINISH KEY

- 1 New topping slab, see Struct. dwgs.
- 2 New polished conc. topping slab

WALL FINISH KEY

- 1 6" CMU, Ptd. both sides
- 2 HdWd veneer on ply

KEY PLAN AREA

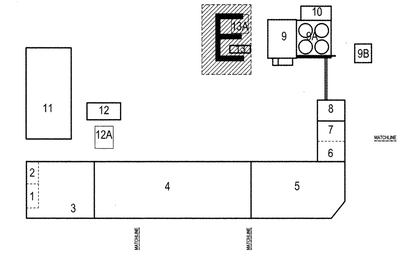

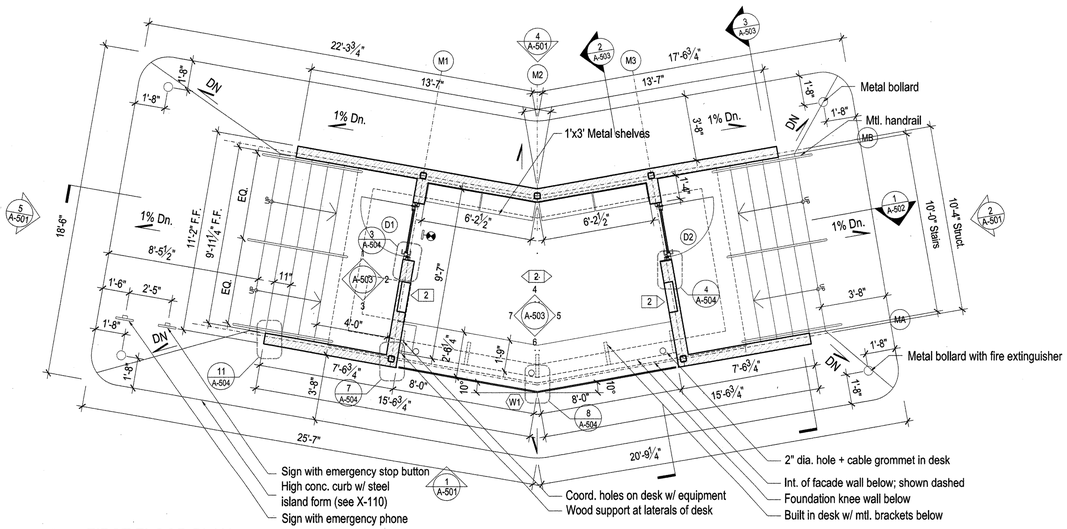

1 FIRST FLOOR PLAN
1/4" = 1'-0

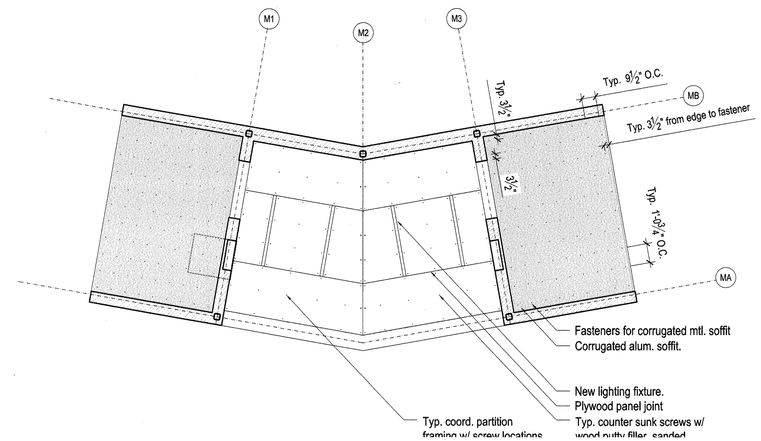

2 FIRST FLOOR PLAN RCP
1/4" = 1'-0

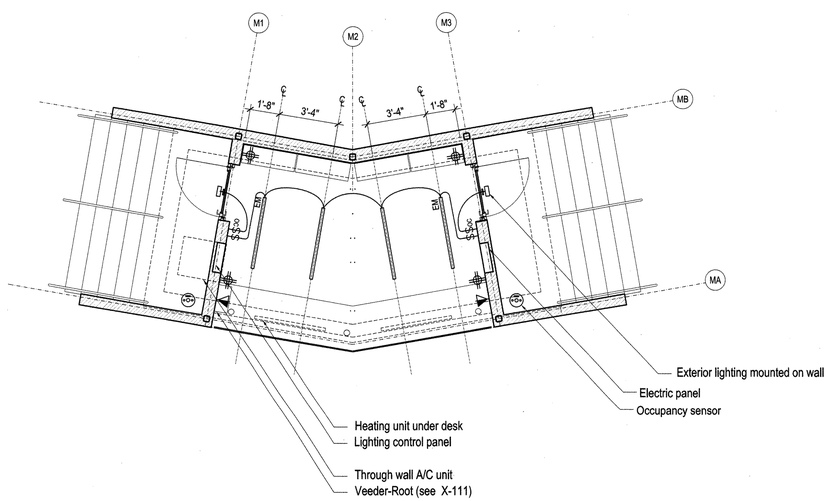

3 FIRST FLOOR PLAN ELECTRICAL AND LIGHTING
1/4" = 1'-0

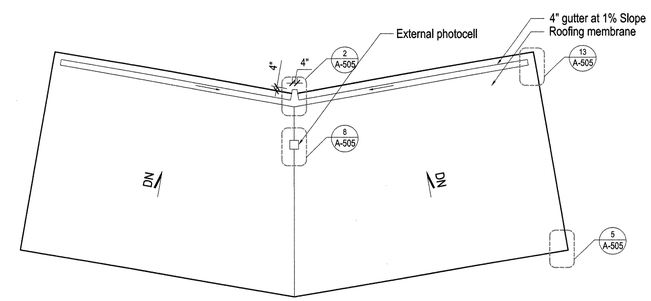

4 ROOF PLAN
1/4" = 1'-0

0 4' 8'

NEW YORK CITY DEPARTMENT OF DESIGN + CONSTRUCTION
DIVISION OF STRUCTURES
BUREAU OF ARCHITECTURE & ENGINEERING

PROJECT NAME:
HARPER ST. YARD

32-11 HARPER STREET,
QUEENS, NY 11368
CAPITAL PROJECT NUMBER
HWQF027C

Architect:
nARCHITECTS, PLLC
68 JAY #317
BROOKLYN, NY 11201
T: 718.260.0845 F: 718.260.0847

MEP Engineer:
PLUS GROUP
231 WEST 29th STREET, RM. 706
NEW YORK, NY 10001
T: 212.233.2700 F: 212.233.2727

Structural Engineer:
ROBERT SILMAN ASSOCIATES
88 UNIVERSITY PLACE
NEW YORK, NY 10003
T: 212.620.7970 F: 212.620.8157

Environmental & Fuel Consultant:
URS
77 GOODELL STREET
BUFFALO, NY 14203
T: 716.856.5636 F: 716.856.2545

Code Consultant:
J CALLAHAN CONSULTING INC.
299 BROADWAY SUITE 1420
NEW YORK, NY 10007
T: 212.766.2115 F: 212.766.2787

Date:	Issue:
05.19.10	75% SD
06.02.10	80% SD
11.17.10	100% Schematic Design
02.09.11	100% Design Dev.
04.06.11	75% CD
03.07.12	100% CD
06.06.12	100% CD - Revised
10.12.12	**Bid Set**

Sheet title:
MONITORING BOOTH FIRST FLOOR PLAN RCP, ROOF PLAN
Scale: 1/4" = 1'-0"

Seal and Signature:
REGISTERED ARCHITECT Minh Hai Tram Chu Hoang 030935 STATE OF NEW YORK

Date: 09.28.12
Project No.: 0902
Dwg By: MP
Chk By: MH

Dwg No:
A-500.00

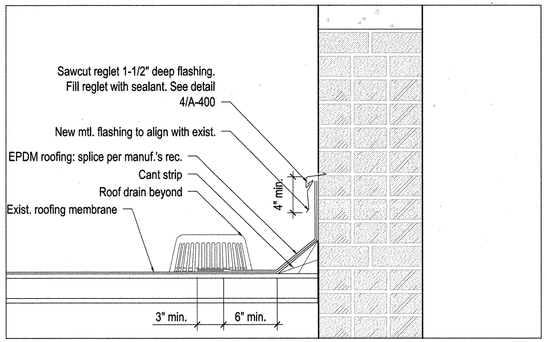

1 FLAT ROOF FLASHING DTL.
3" = 1'-0"

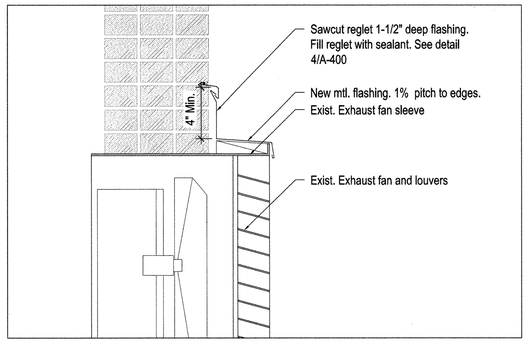

2 TYP. EXHAUST FAN FLASHING DTL.
3" = 1'-0"

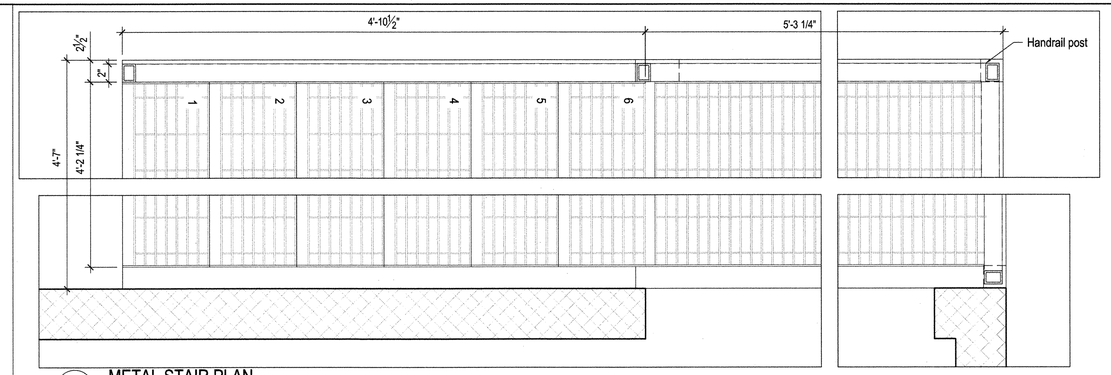

3 METAL STAIR PLAN
1 1/2" = 1'-0"

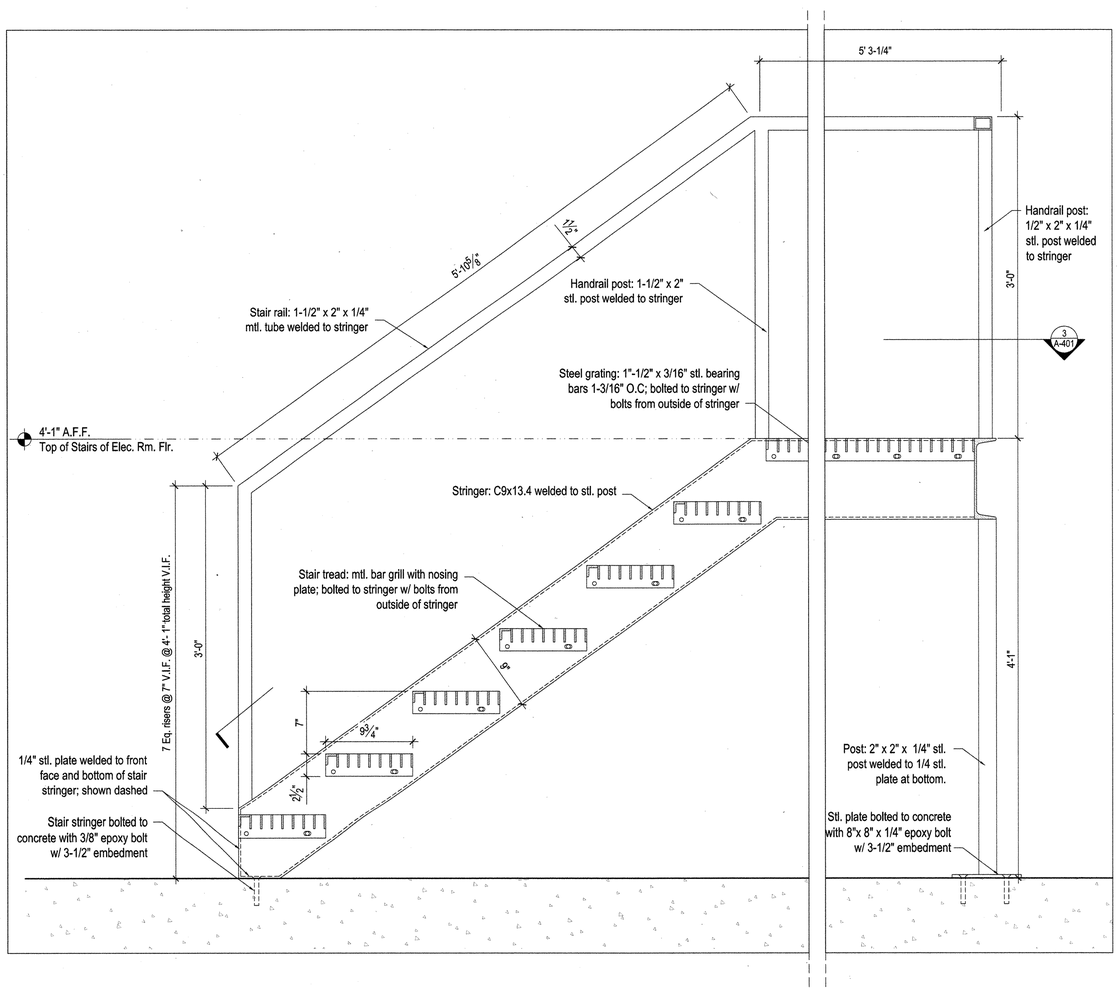

4 METAL STAIR LONGITUDINAL SECTION
1 1/2" = 1'-0"

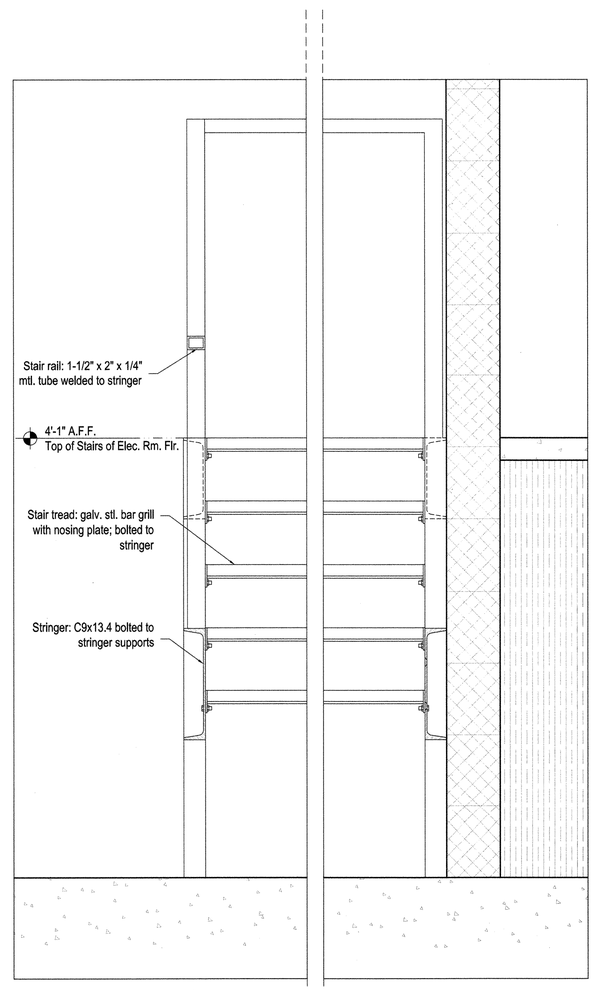

5 METAL STAIR CROSS SECTION
1 1/2" = 1'-0"

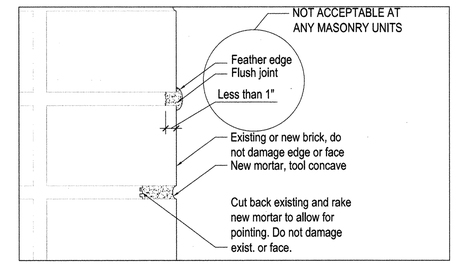

NOTE: All mortar joints shall be tooled concave. The surface shall be slightly recessed from the face of the masonry unit. The mortar shall not have a feathered edge against the face of the masonry nor a mortar depth of less than 1"

6 REPOINTING DETAIL
6" = 1'-0"

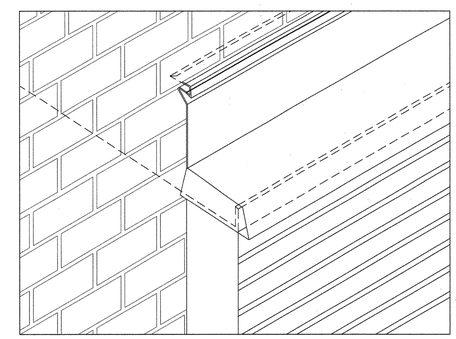

7 FLASHING ABOVE EXT. EXHAUST FANS
N.T.S.

NEW YORK CITY DEPARTMENT OF DESIGN + CONSTRUCTION
DIVISION OF STRUCTURES
BUREAU OF ARCHITECTURE & ENGINEERING

PROJECT NAME:
HARPER ST. YARD

32-11 HARPER STREET,
QUEENS, NY 11368
CAPITAL PROJECT NUMBER
HWQF027C

Architect:
nARCHITECTS, PLLC
68 JAY #317
BROOKLYN, NY 11201
T: 718.260.0845 F: 718.260.0847

MEP Engineer:
PLUS GROUP
231 WEST 29th STREET, RM. 706
NEW YORK, NY 10001
T: 212.233.2700 F: 212.233.2727

Structural Engineer:
ROBERT SILMAN ASSOCIATES
88 UNIVERSITY PLACE
NEW YORK, NY 10003
T: 212.620.7970 F: 212.620.8157

Environmental & Fuel Consultant:
URS
77 GOODELL STREET
BUFFALO, NY 14203
T: 716.856.5636 F: 716.856.2545

Code Consultant:
J CALLAHAN CONSULTING INC.
299 BROADWAY SUITE 1420
NEW YORK, NY 10007
T: 212.766.2115 F: 212.766.2787

Date:	Issue:
05.19.10	75% SD
06.02.10	80% SD
11.17.10	100% Schematic Design
02.09.11	100% Design Dev.
04.06.11	75% CD
03.07.12	100% CD
06.06.12	100% CD - Revised
10.12.12	**Bid Set**

Sheet title:
MAINTENANCE & REPAIR BUILDING DETAILS
Scale: As noted

Seal and Signature:
REGISTERED ARCHITECT Minh Ha Tram Chu Hoang 030935 STATE OF NEW YORK

Date: 09.28.12
Project No.: 0902
Dwg By: MP
Chk By: MH

Dwg No:
A-401.00

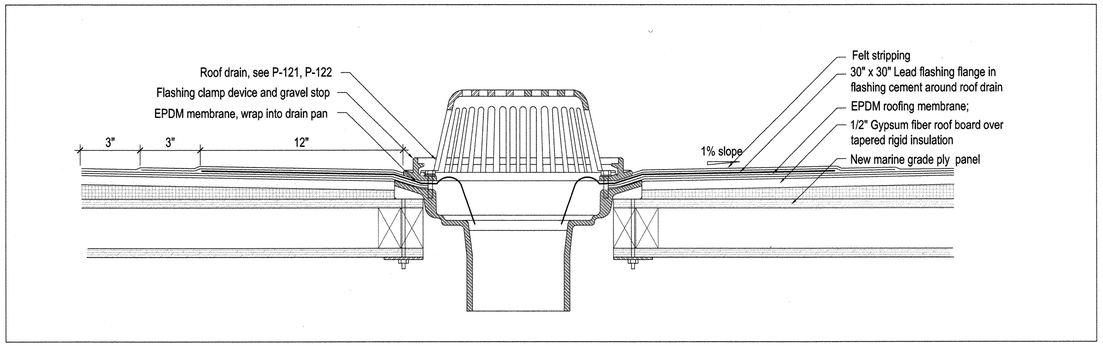

1 TYP. SLOPED ROOF DRAIN PENETRATION
3" = 1'-0"

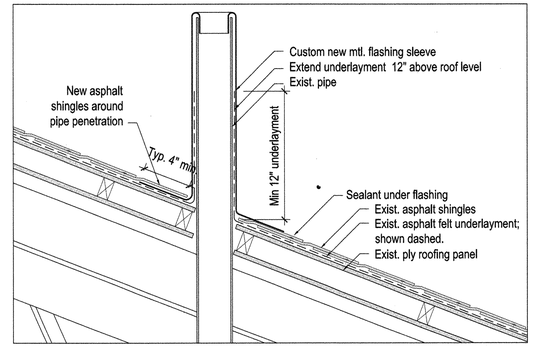

2 TYP. SLOPED ROOF PIPE PENETRATION
1 1/2" = 1'-0"

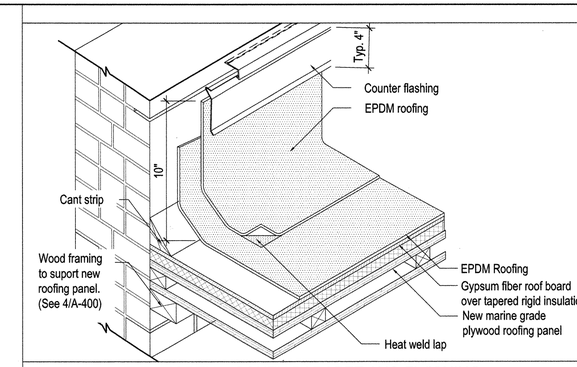

3 TYP. NORTH + SOUTH PARAPET AXO FLASHING
N.T.S.

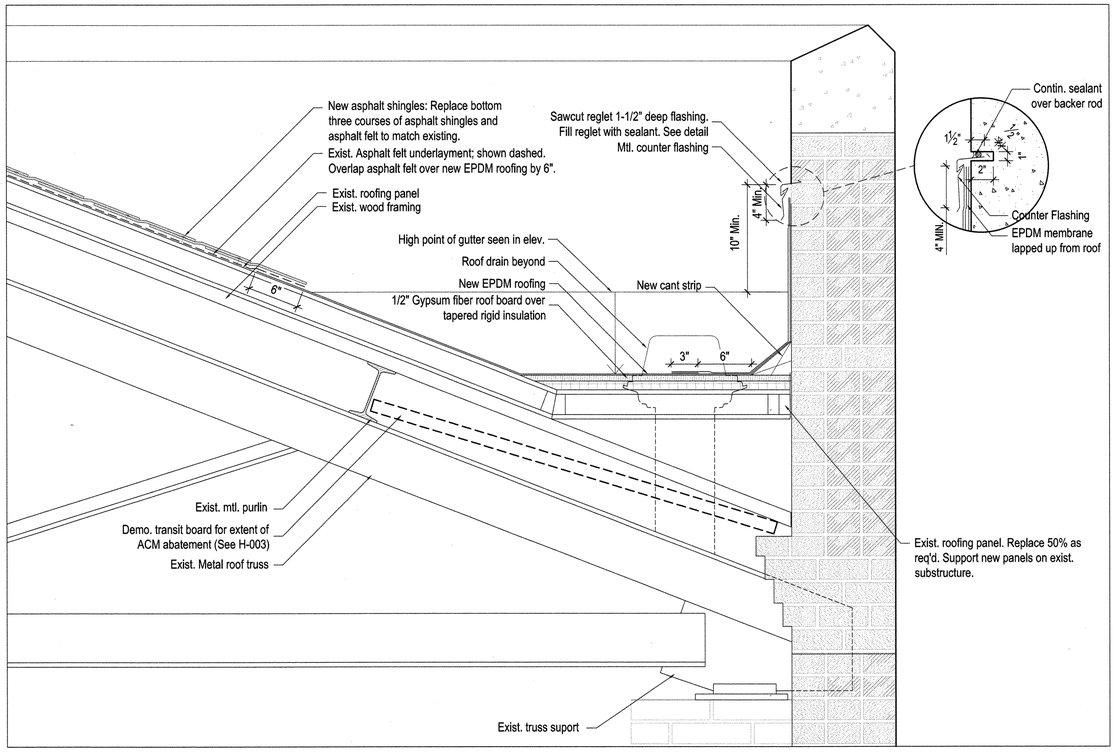

4 SECTION DTL. AT NORTH & SOUTH PARAPET
1 1/2" = 1'-0"

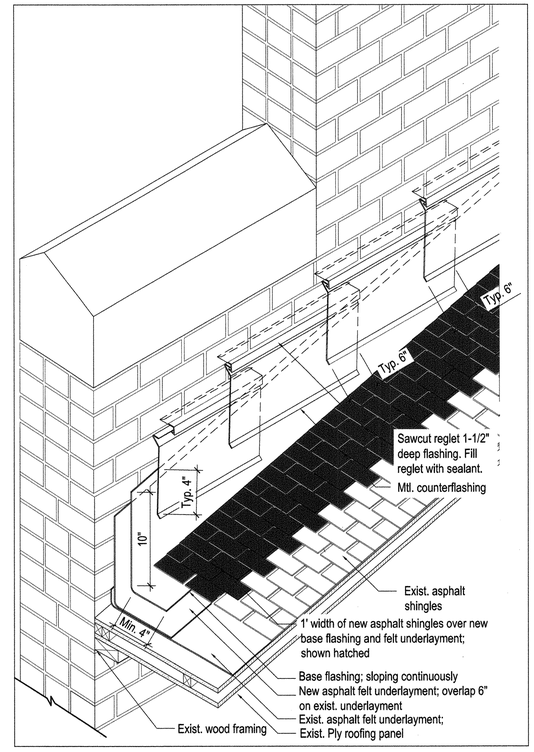

5 TYP. SECTION DTL. AT JOINT BETWEEN DOMES
1 1/2" = 1'-0"

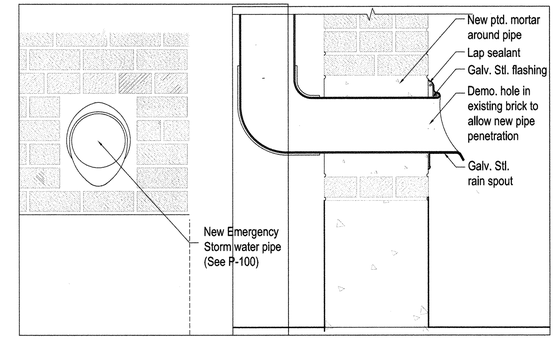

6.1 ELEV. DTL. AT OVER FLOW DRAIN
1 1/2" = 1'-0"

6.2 SEC. DTL. DRAIN
1 1/2" = 1'-0"

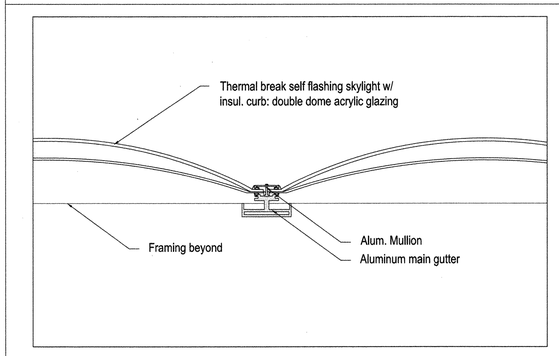

7 TYP. SECTION DTL. AT JOINT BETWEEN DOMES
1 1/2" = 1'-0"

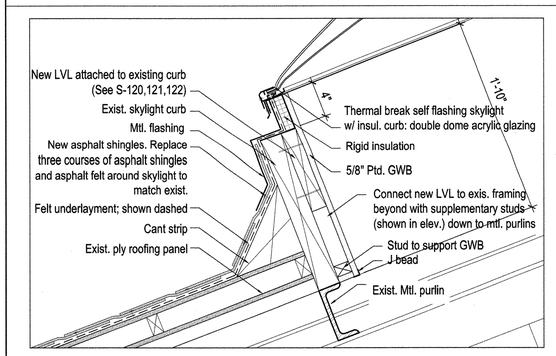

8 TYP. SECTION DTL. AT SLOPED ROOF SKYLIGHT
1 1/2" = 1'-0"

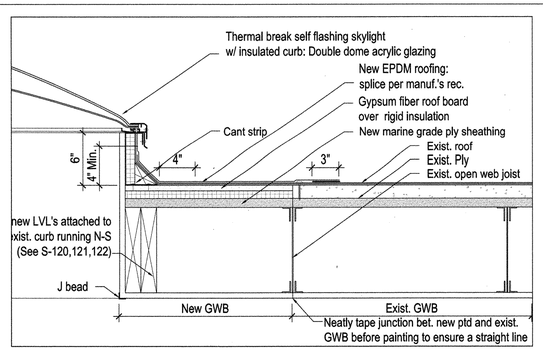

9 TYP. SECTION DTL. AT WEST FLAT ROOF SKYLIGHT
1 1/2" = 1'-0"

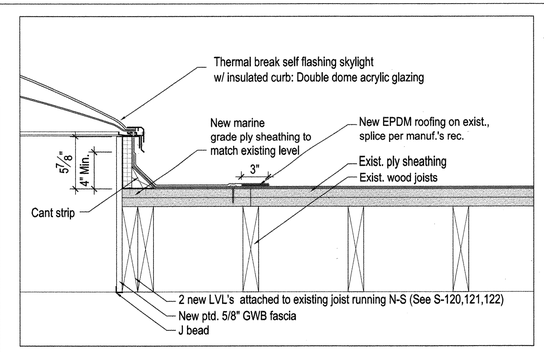

10 TYP. SECTION DTL. AT EAST FLAT ROOF SKYLIGHT
1 1/2" = 1'-0"

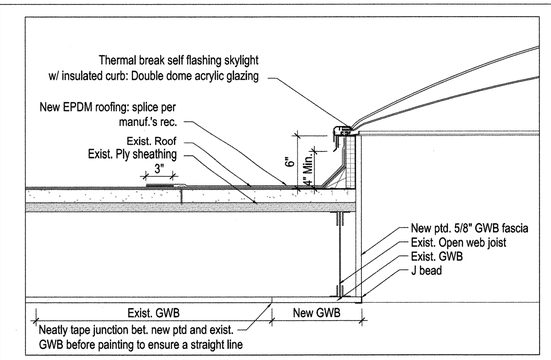

11 SECTION DTL. AT WEST EXIST. CURB SKYLIGHT
1 1/2" = 1'-0"

NEW YORK CITY DEPARTMENT OF DESIGN + CONSTRUCTION
DIVISION OF STRUCTURES
BUREAU OF ARCHITECTURE & ENGINEERING

PROJECT NAME:
HARPER ST. YARD

32-11 HARPER STREET,
QUEENS, NY 11368
CAPITAL PROJECT NUMBER
HWQF027C

Architect:
nARCHITECTS, PLLC
68 JAY #317
BROOKLYN, NY 11201
T: 718.260.0845 F: 718.260.0847

MEP Engineer:
PLUS GROUP
231 WEST 29th STREET, RM. 706
NEW YORK, NY 10001
T: 212.233.2700 F: 212.233.2727

Structural Engineer:
ROBERT SILMAN ASSOCIATES
88 UNIVERSITY PLACE
NEW YORK, NY 10003
T: 212.620.7970 F: 212.620.8157

Environmental & Fuel Consultant:
URS
77 GOODELL STREET
BUFFALO, NY 14203
T: 716.856.5636 F: 716.856.2545

Code Consultant:
J CALLAHAN CONSULTING INC.
299 BROADWAY SUITE 1420
NEW YORK, NY 10007
T: 212.766.2115 F: 212.766.2787

Date:	Issue:
05.19.10	75% SD
06.02.10	80% SD
11.17.10	100% Schematic Design
02.09.11	100% Design Dev.
04.06.11	75% CD
03.07.12	100% CD
06.06.12	100% CD - Revised
10.12.12	**Bid Set**

Sheet title:
MAINTENANCE & REPAIR BUILDING DETAILS
Scale: As noted

Seal and Signature:
REGISTERED ARCHITECT Minh-Ha Tram Chu Hoang 030935 STATE OF NEW YORK

Date: 09.28.12
Project No.: 0902
Dwg By: MP
Chk By: MH

Dwg No:
A-400.00

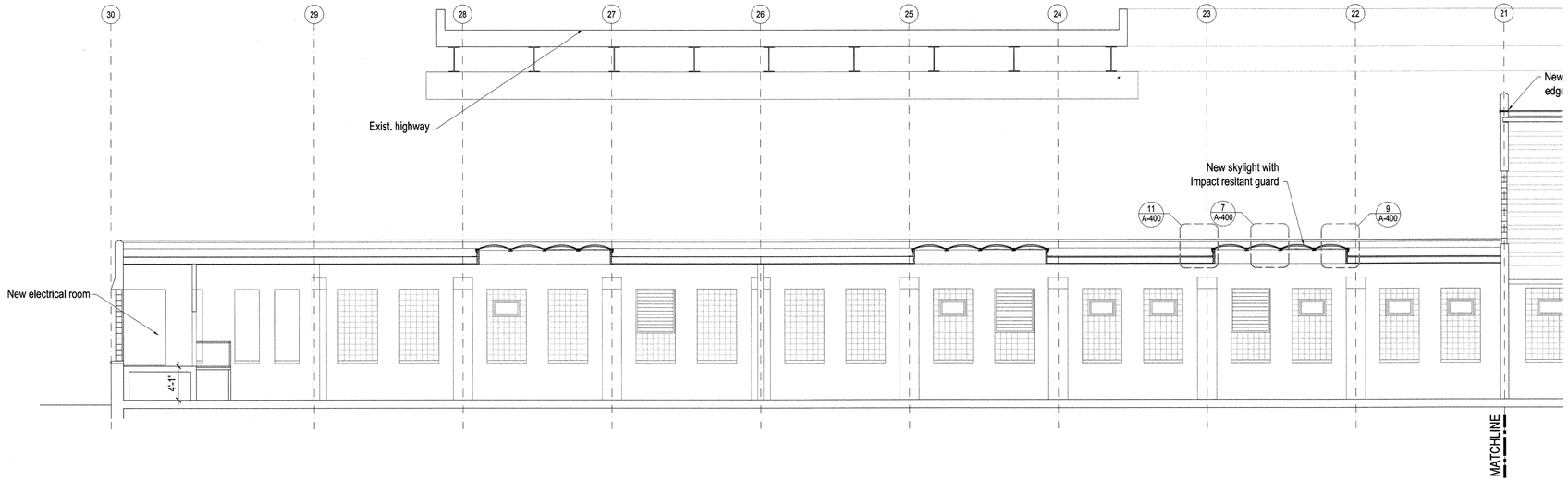

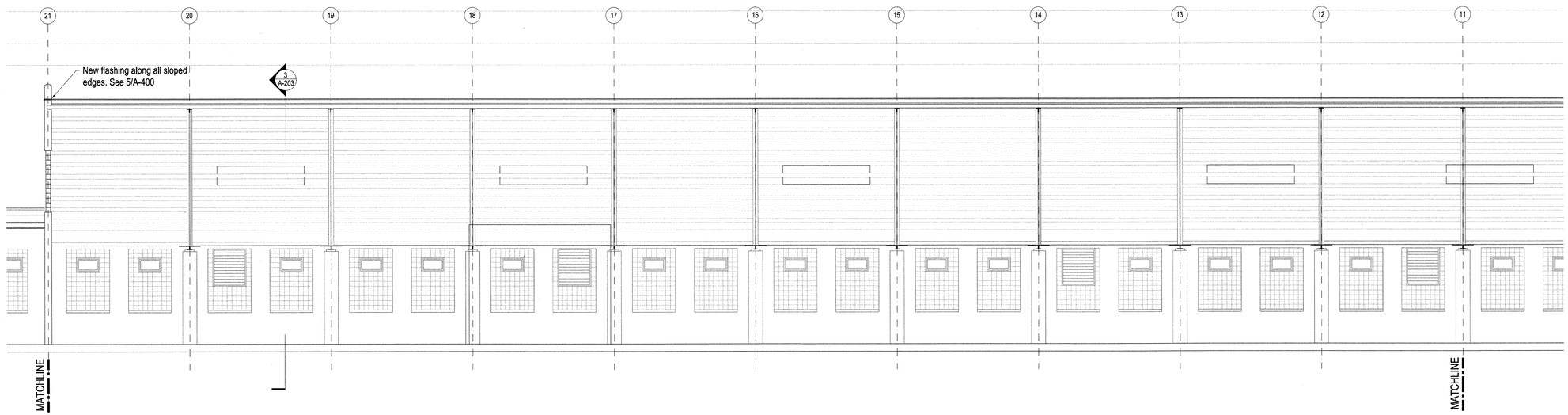

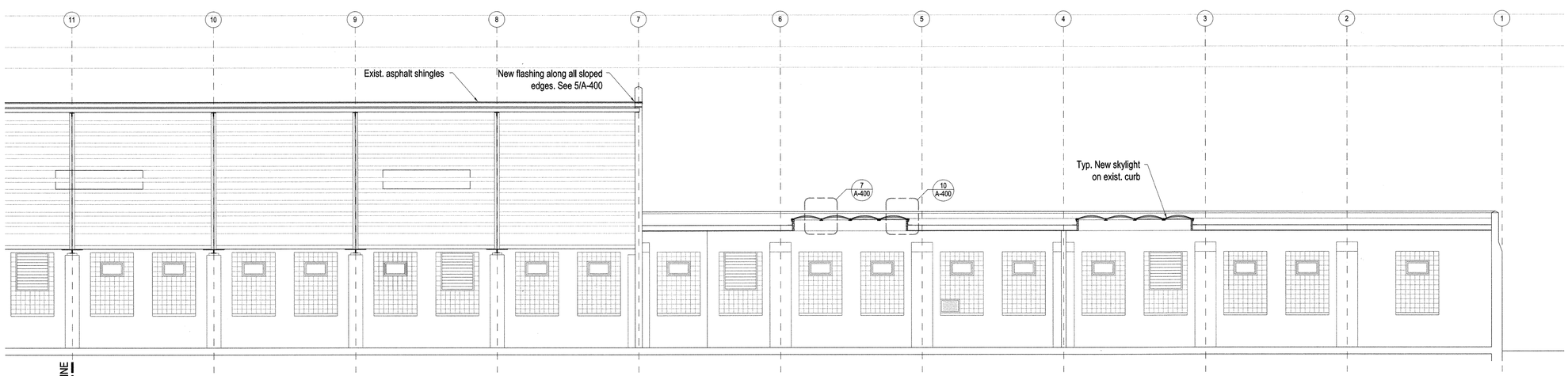

1 SOUTH INTERIOR ELEVATION
1/8" = 1'-0"

KEY PLAN AREA

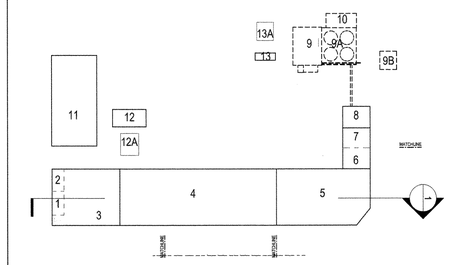

NEW YORK CITY DEPARTMENT OF DESIGN + CONSTRUCTION
DIVISION OF STRUCTURES
BUREAU OF ARCHITECTURE & ENGINEERING

PROJECT NAME:
HARPER ST. YARD

32-11 HARPER STREET,
QUEENS, NY 11368
CAPITAL PROJECT NUMBER
HWQF027C

Architect:
nARCHITECTS, PLLC
68 JAY #317
BROOKLYN, NY 11201
T: 718.260.0845 F: 718.260.0847

MEP Engineer:
PLUS GROUP
231 WEST 29th STREET, RM. 706
NEW YORK, NY 10001
T: 212.233.2700 F: 212.233.2727

Structural Engineer:
ROBERT SILMAN ASSOCIATES
88 UNIVERSITY PLACE
NEW YORK, NY 10003
T: 212.620.7970 F: 212.620.8157

Environmental & Fuel Consultant:
URS
77 GOODELL STREET
BUFFALO, NY 14203
T: 716.856.5636 F: 716.856.2545

Code Consultant:
J CALLAHAN CONSULTING INC.
299 BROADWAY SUITE 1420
NEW YORK, NY 10007
T: 212.766.2115 F: 212.766.2787

Date:	Issue:
05.19.10	75% SD
06.02.10	80% SD
11.17.10	100% Schematic Design
02.09.11	100% Design Dev.
04.06.11	75% CD
03.07.12	100% CD
06.06.12	100% CD - Revised
10.12.12	**Bid Set**

Sheet title:
SOUTH INTERIOR SECTION
Scale: 1/8" = 1'-0"

Seal and Signature:
REGISTERED ARCHITECT Minh HaTram Chu Hoang 030935 STATE OF NEW YORK

Date: 09.28.12
Project No.: 0902
Dwg By: MP
Chk By: MH

Dwg No:
A-302.00

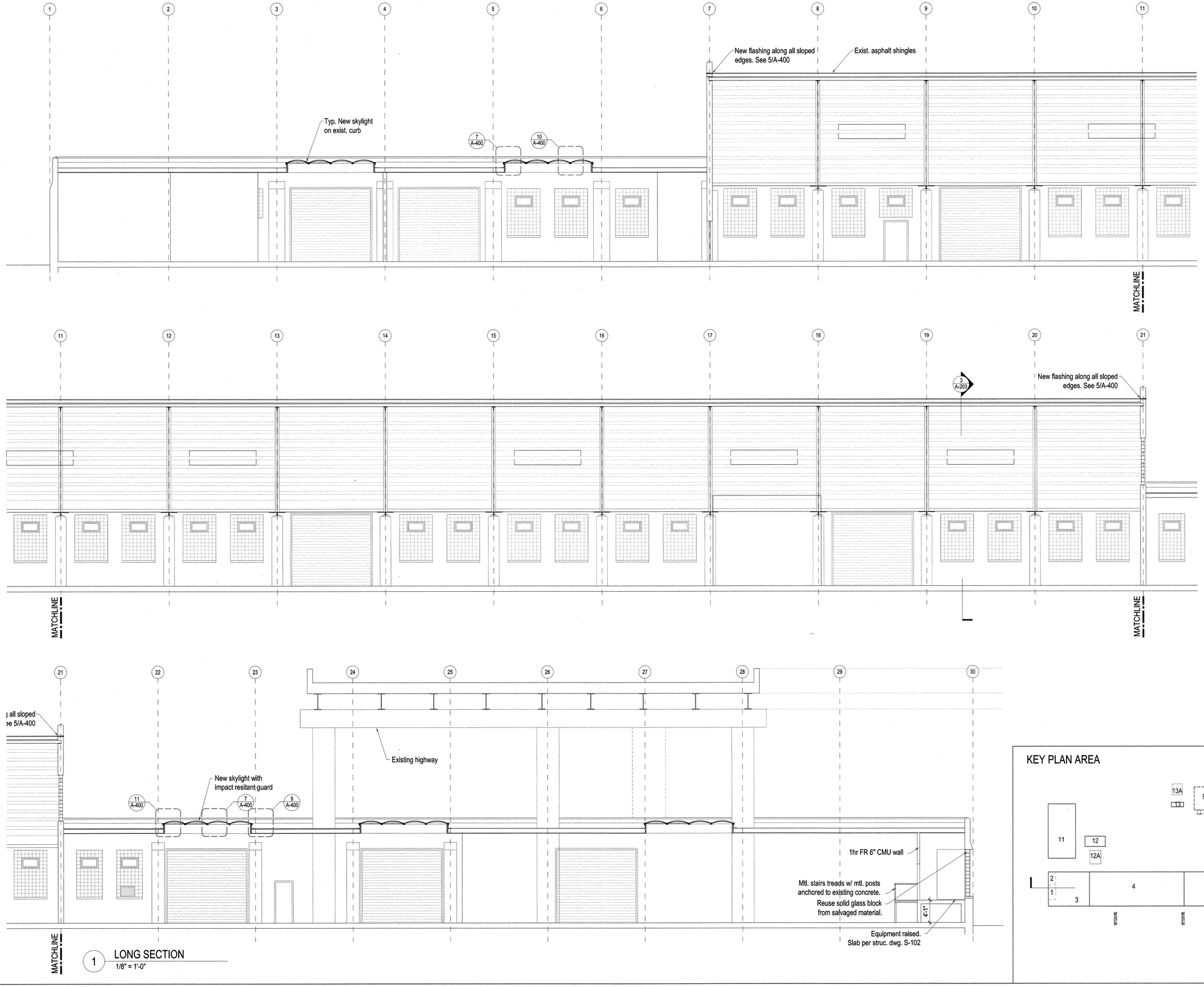

1 LONG SECTION
1/8" = 1'-0"

KEY PLAN AREA

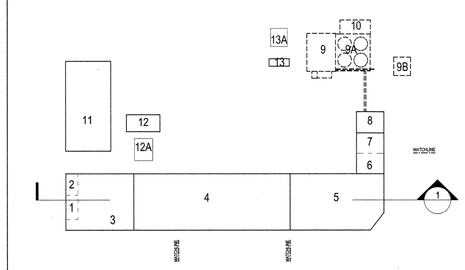

NEW YORK CITY DEPARTMENT OF DESIGN + CONSTRUCTION
DIVISION OF STRUCTURES
BUREAU OF ARCHITECTURE & ENGINEERING

PROJECT NAME:
HARPER ST. YARD

32-11 HARPER STREET,
QUEENS, NY 11368
CAPITAL PROJECT NUMBER
HWQF027C

Architect:
nARCHITECTS, PLLC
68 JAY #317
BROOKLYN, NY 11201
T: 718.260.0845 F: 718.260.0847

MEP Engineer:
PLUS GROUP
231 WEST 29th STREET, RM. 706
NEW YORK, NY 10001
T: 212.233.2700 F: 212.233.2727

Structural Engineer:
ROBERT SILMAN ASSOCIATES
88 UNIVERSITY PLACE
NEW YORK, NY 10003
T: 212.620.7970 F: 212.620.8157

Environmental & Fuel Consultant:
URS
77 GOODELL STREET
BUFFALO, NY 14203
T: 716.856.5636 F: 716.856.2545

Code Consultant:
J CALLAHAN CONSULTING INC.
299 BROADWAY SUITE 1420
NEW YORK, NY 10007
T: 212.766.2115 F: 212.766.2787

Date:	Issue:
05.19.10	75% SD
06.02.10	80% SD
11.17.10	100% Schematic Design
02.09.11	100% Design Dev.
04.06.11	75% CD
03.07.12	100% CD
06.06.12	100% CD - Revised
10.12.12	**Bid Set**

Sheet title:
NORTH BUILDING SECTION

Scale: 1/8" = 1'-0"

Seal and Signature:
REGISTERED ARCHITECT Mimi HaTram Chu Hoang 030935 STATE OF NEW YORK

Date: 09.28.12
Project No.: 0902
Dwg By: MP
Chk By: MH

Dwg No:
A-301.00

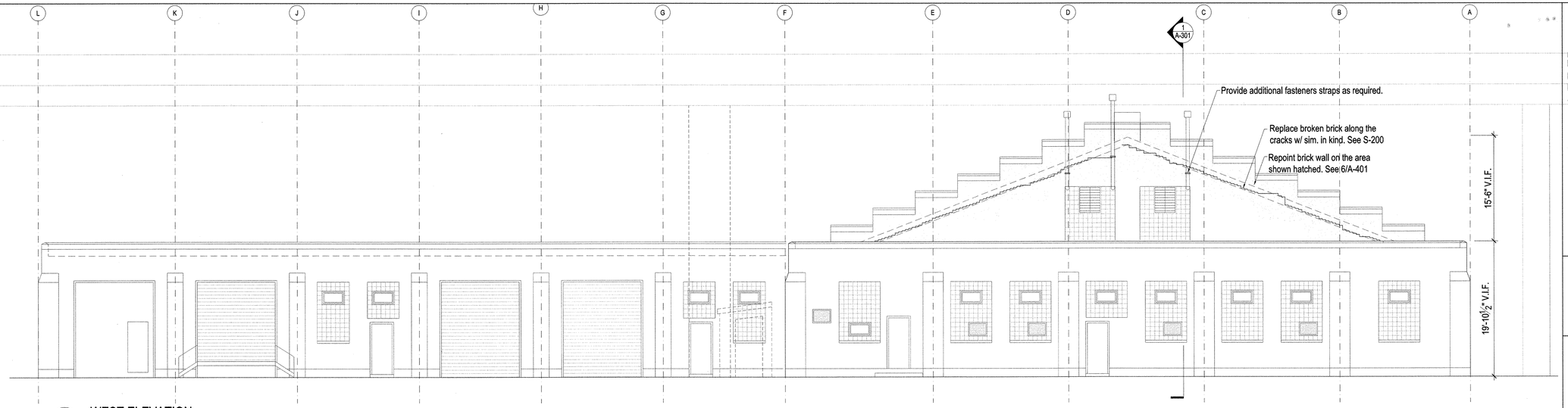

1 WEST ELEVATION
1/8" = 1'-0"

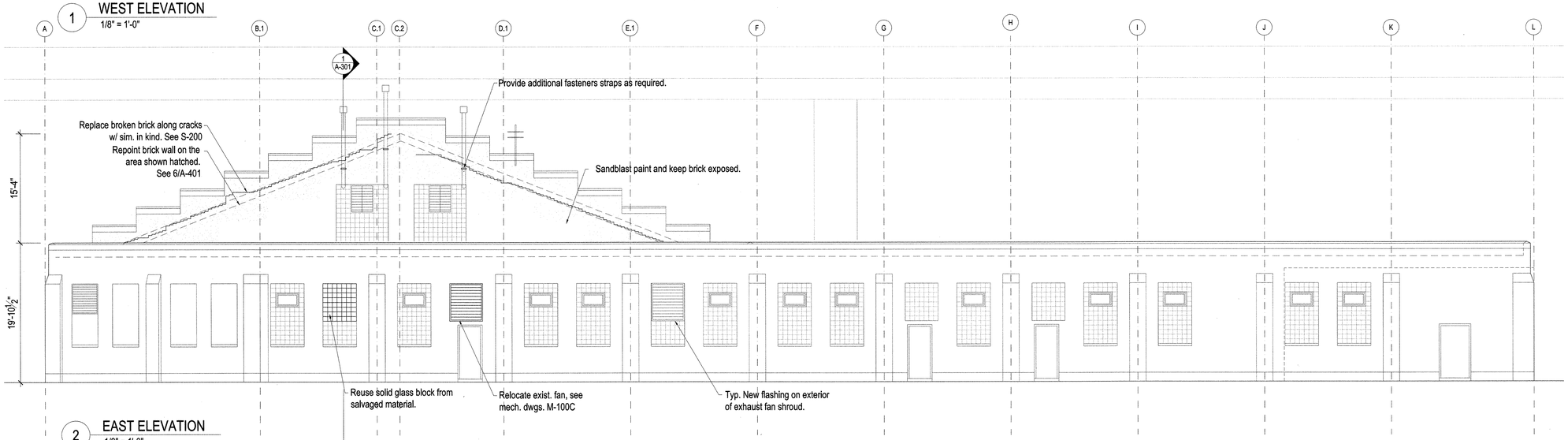

2 EAST ELEVATION
1/8" = 1'-0"

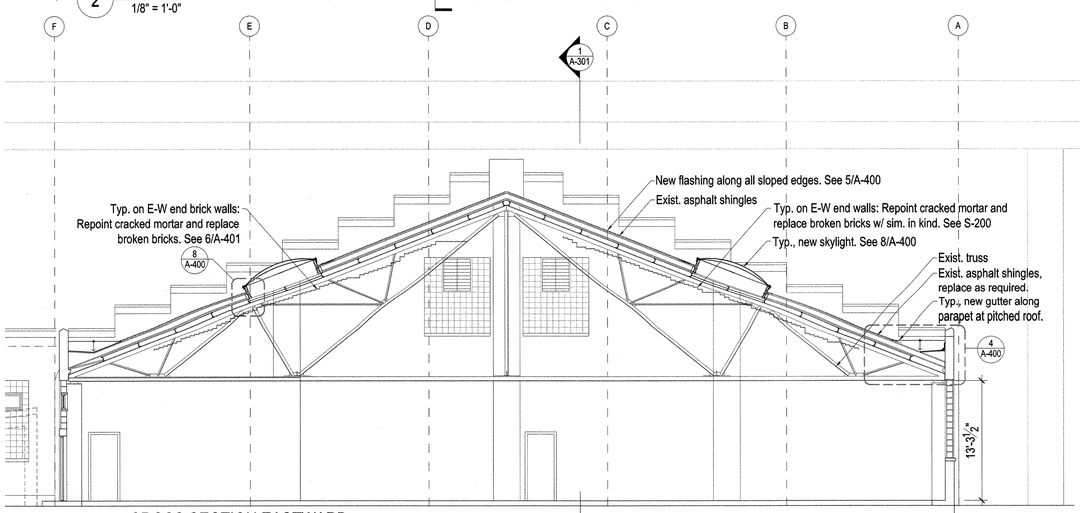

3 CROSS SECTION EASTWARD
1/8" = 1'-0"

KEY PLAN AREA

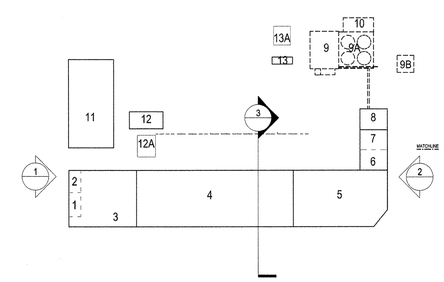

NEW YORK CITY DEPARTMENT OF DESIGN + CONSTRUCTION
DIVISION OF STRUCTURES
BUREAU OF ARCHITECTURE & ENGINEERING

PROJECT NAME:
HARPER ST. YARD

32-11 HARPER STREET,
QUEENS, NY 11368
CAPITAL PROJECT NUMBER
HWQF027C

Architect:
nARCHITECTS, PLLC
68 JAY #317
BROOKLYN, NY 11201
T: 718.260.0845 F: 718.260.0847

MEP Engineer:
PLUS GROUP
231 WEST 29th STREET, RM. 706
NEW YORK, NY 10001
T: 212.233.2700 F: 212.233.2727

Structural Engineer:
ROBERT SILMAN ASSOCIATES
88 UNIVERSITY PLACE
NEW YORK, NY 10003
T: 212.620.7970 F: 212.620.8157

Environmental & Fuel Consultant:
URS
77 GOODELL STREET
BUFFALO, NY 14203
T: 716.856.5636 F: 716.856.2545

Code Consultant:
J CALLAHAN CONSULTING INC.
299 BROADWAY SUITE 1420
NEW YORK, NY 10007
T: 212.766.2115 F: 212.766.2787

Date:	Issue:
05.19.10	75% SD
06.02.10	80% SD
11.17.10	100% Schematic Design
02.09.11	100% Design Dev.
04.06.11	75% CD
03.07.12	100% CD
06.06.12	100% CD - Revised
10.12.12	**Bid Set**

Sheet title:
WEST & EAST ELEVATIONS
Scale: 1/8" = 1'-0"

Seal and Signature:
REGISTERED ARCHITECT
Minh HaTram Chu Hang
030935
STATE OF NEW YORK

Date: 09.28.12
Project No.: 0902
Dwg By: MP
Chk By: MH

Dwg No:
A-203.00

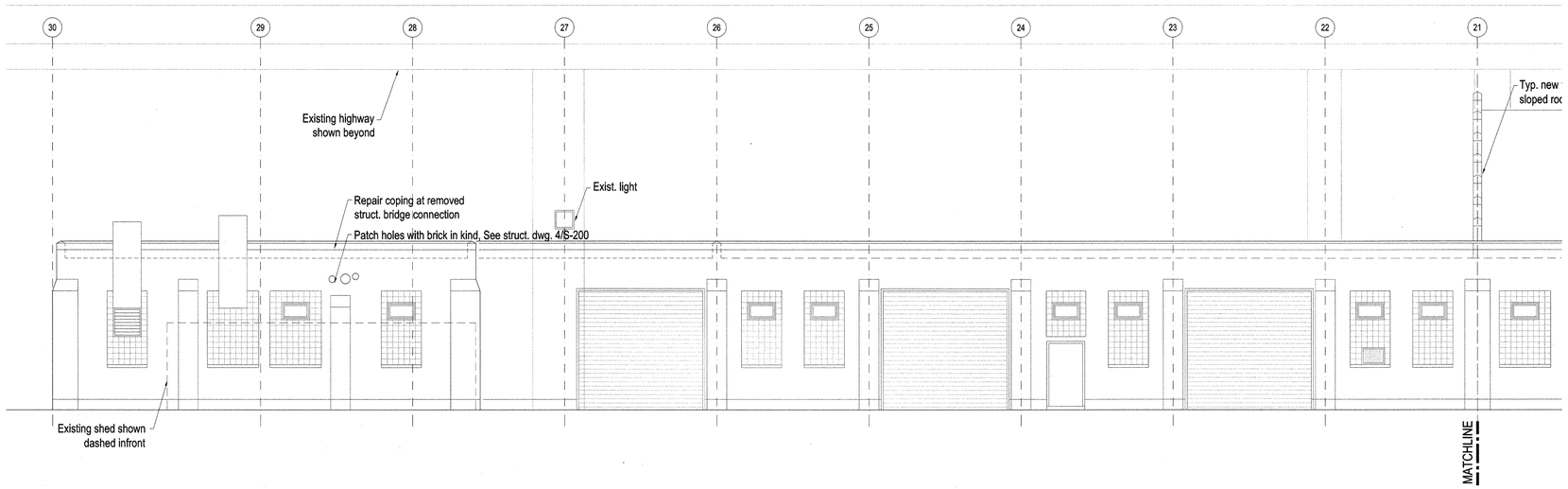

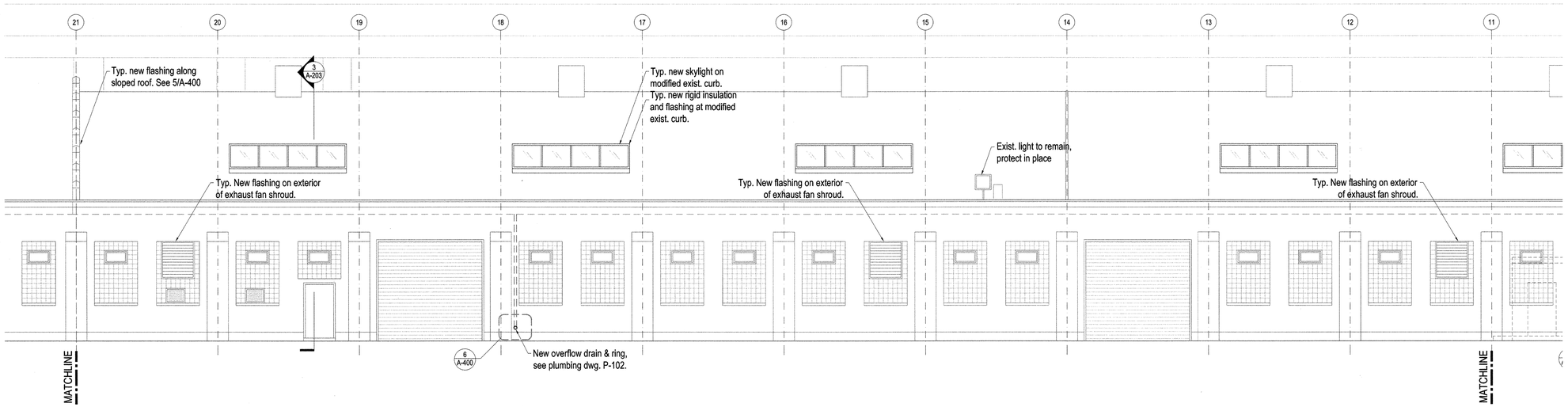

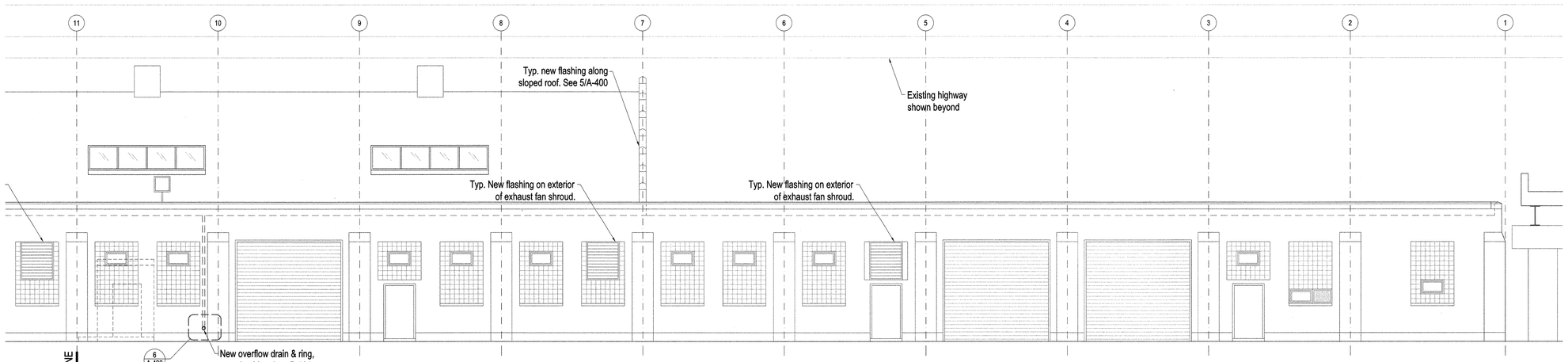

1 NORTH ELEVATION
1/8" = 1'-0"

KEY PLAN AREA

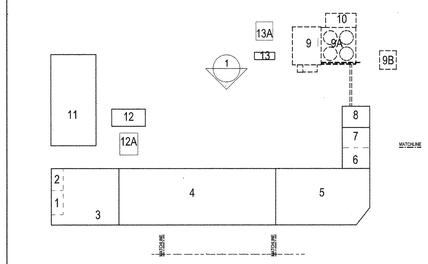

NEW YORK CITY DEPARTMENT OF DESIGN + CONSTRUCTION
DIVISION OF STRUCTURES
BUREAU OF ARCHITECTURE & ENGINEERING

PROJECT NAME:
HARPER ST. YARD

32-11 HARPER STREET,
QUEENS, NY 11368
CAPITAL PROJECT NUMBER
HWQF027C

Architect:
nARCHITECTS, PLLC
68 JAY #317
BROOKLYN, NY 11201
T: 718.260.0845 F: 718.260.0847

MEP Engineer:
PLUS GROUP
231 WEST 29th STREET, RM. 706
NEW YORK, NY 10001
T: 212.233.2700 F: 212.233.2727

Structural Engineer:
ROBERT SILMAN ASSOCIATES
88 UNIVERSITY PLACE
NEW YORK, NY 10003
T: 212.620.7970 F: 212.620.8157

Environmental & Fuel Consultant:
URS
77 GOODELL STREET
BUFFALO, NY 14203
T: 716.856.5636 F: 716.856.2545

Code Consultant:
J CALLAHAN CONSULTING INC.
299 BROADWAY SUITE 1420
NEW YORK, NY 10007
T: 212.766.2115 F: 212.766.2787

Date:	Issue:
05.19.10	75% SD
06.02.10	80% SD
11.17.10	100% Schematic Design
02.09.11	100% Design Dev.
04.06.11	75% CD
03.07.12	100% CD
06.06.12	100% CD - Revised
10.12.12	**Bid Set**

Sheet title:
NORTH ELEVATION
Scale: 1/8" = 1'-0"

Seal and Signature:
REGISTERED ARCHITECT
Minh HaTram Chu Hang
030935
STATE OF NEW YORK

Date: 09.28.12
Project No.: 0902
Dwg By: MP
Chk By: MH

Dwg No:
A-202.00

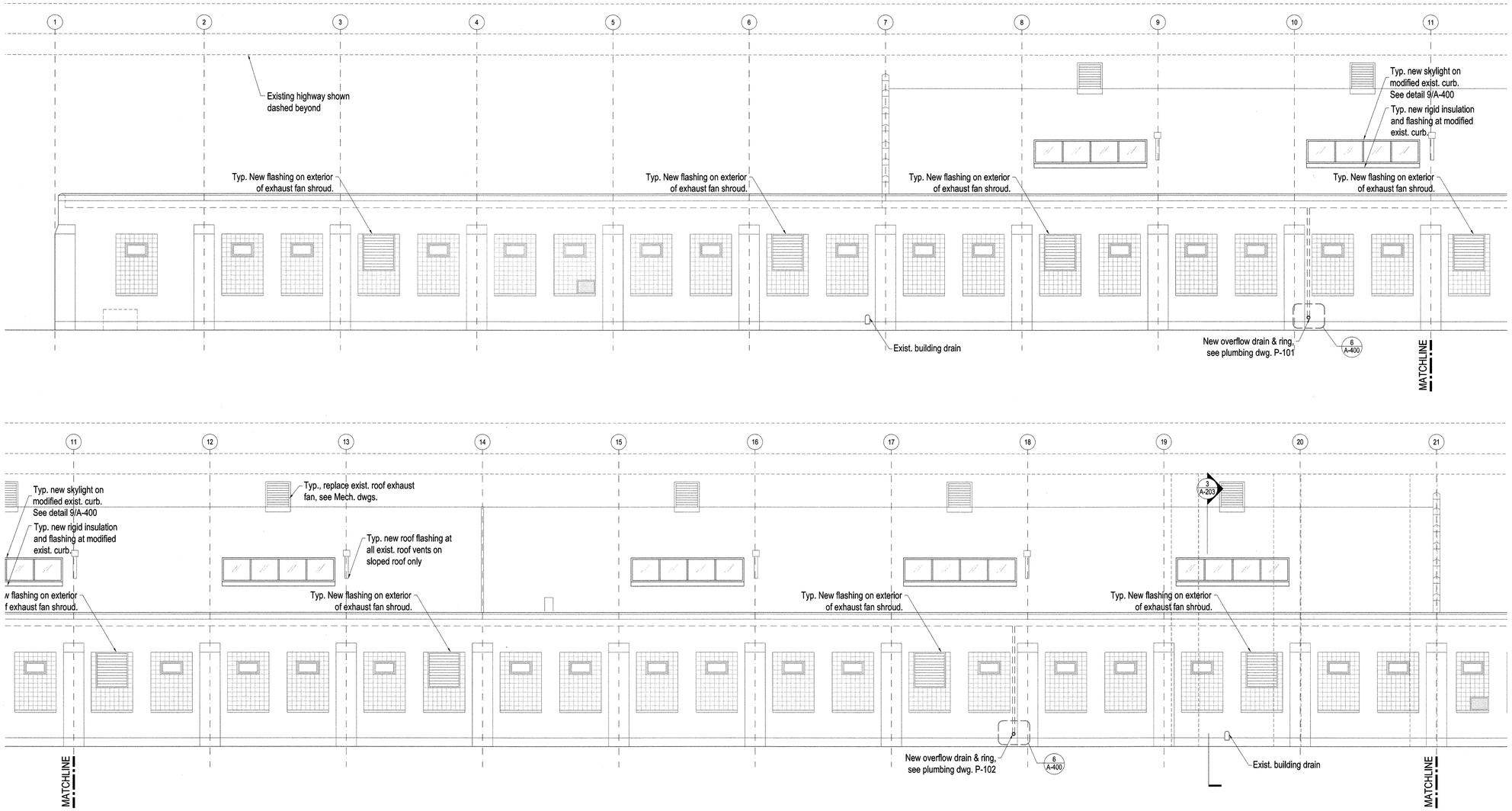

1 SOUTH ELEVATION
1/8" = 1'-0"

KEY PLAN AREA

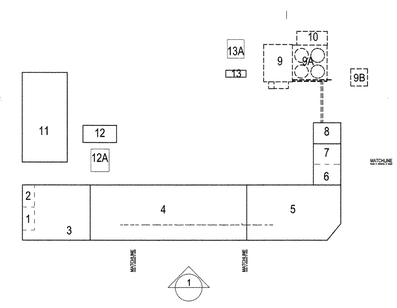

NEW YORK CITY DEPARTMENT OF DESIGN + CONSTRUCTION
DIVISION OF STRUCTURES
BUREAU OF ARCHITECTURE & ENGINEERING

PROJECT NAME:
HARPER ST. YARD

32-11 HARPER STREET,
QUEENS, NY 11368
CAPITAL PROJECT NUMBER
HWQF027C

Architect:
nARCHITECTS, PLLC
68 JAY #317
BROOKLYN, NY 11201
T: 718.260.0845 F: 718.260.0847

MEP Engineer:
PLUS GROUP
231 WEST 29th STREET, RM. 706
NEW YORK, NY 10001
T: 212.233.2700 F: 212.233.2727

Structural Engineer:
ROBERT SILMAN ASSOCIATES
88 UNIVERSITY PLACE
NEW YORK, NY 10003
T: 212.620.7970 F: 212.620.8157

Environmental & Fuel Consultant:
URS
77 GOODELL STREET
BUFFALO, NY 14203
T: 716.856.5636 F: 716.856.2545

Code Consultant:
J CALLAHAN CONSULTING INC.
299 BROADWAY SUITE 1420
NEW YORK, NY 10007
T: 212.766.2115 F: 212.766.2787

Date:	Issue:
05.19.10	75% SD
06.02.10	80% SD
11.17.10	100% Schematic Design
02.09.11	100% Design Dev.
04.06.11	75% CD
03.07.12	100% CD
06.06.12	100% CD - Revised
10.12.12	**Bid Set**

Sheet title:
SOUTH ELEVATION

Scale: 1/8" = 1'-0"

Seal and Signature:
REGISTERED ARCHITECT
Minh Ha Tram Chu Hoang
030935
STATE OF NEW YORK

Date: 09.28.12
Project No.: 0902
Dwg By: MP
Chk By: MH

Dwg No:
A-201.00

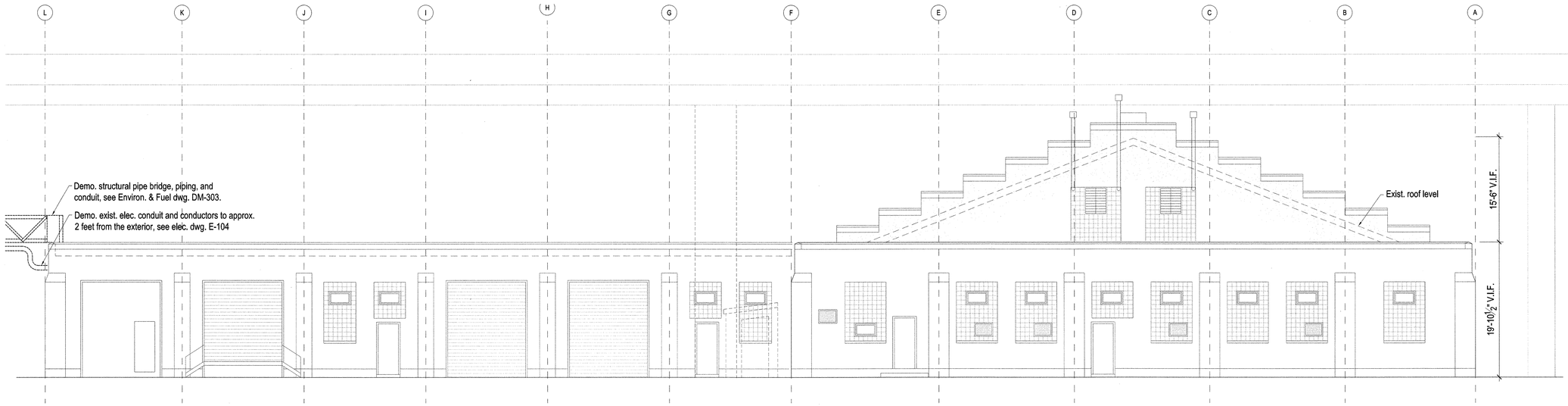

1 DEMO WEST ELEVATION
1/8" = 1'-0"

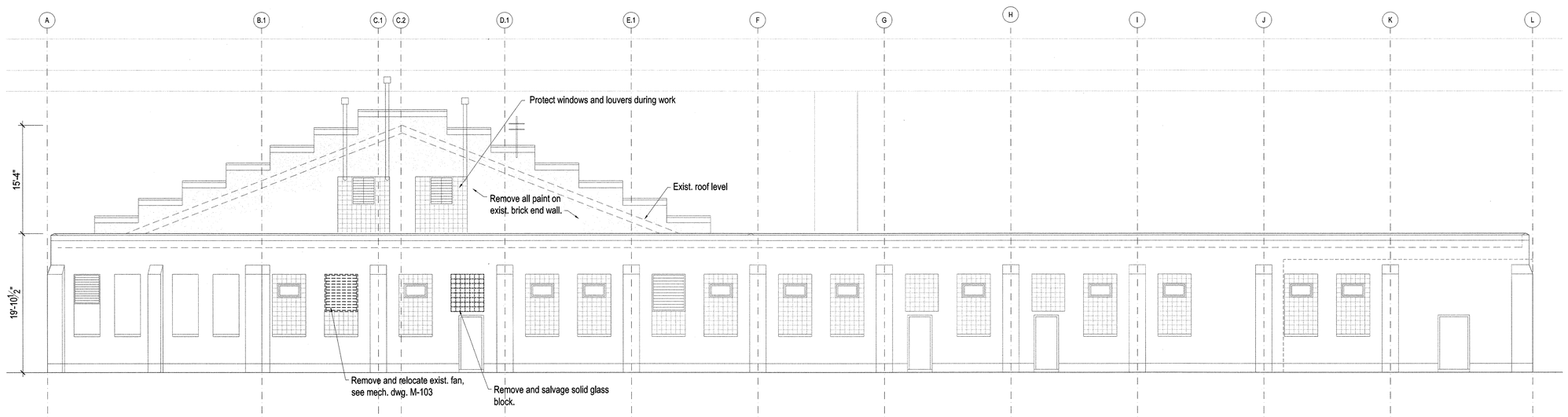

2 DEMO EAST ELEVATION
1/8" = 1'-0"

KEY PLAN AREA

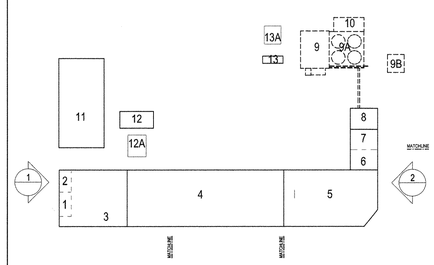

NEW YORK CITY DEPARTMENT OF DESIGN + CONSTRUCTION
DIVISION OF STRUCTURES
BUREAU OF ARCHITECTURE & ENGINEERING

PROJECT NAME:
HARPER ST. YARD

32-11 HARPER STREET,
QUEENS, NY 11368
CAPITAL PROJECT NUMBER
HWQF027C

Architect:
nARCHITECTS, PLLC
68 JAY #317
BROOKLYN, NY 11201
T: 718.260.0845 F: 718.260.0847

MEP Engineer:
PLUS GROUP
231 WEST 29th STREET, RM. 706
NEW YORK, NY 10001
T: 212.233.2700 F: 212.233.2727

Structural Engineer:
ROBERT SILMAN ASSOCIATES
88 UNIVERSITY PLACE
NEW YORK, NY 10003
T: 212.620.7970 F: 212.620.8157

Environmental & Fuel Consultant:
URS
77 GOODELL STREET
BUFFALO, NY 14203
T: 716.856.5636 F: 716.856.2545

Code Consultant:
J CALLAHAN CONSULTING INC.
299 BROADWAY SUITE 1420
NEW YORK, NY 10007
T: 212.766.2115 F: 212.766.2787

Date:	Issue:
05.19.10	75% SD
06.02.10	80% SD
11.17.10	100% Schematic Design
02.09.11	100% Design Dev.
04.06.11	75% CD
03.07.12	100% CD
06.06.12	100% CD - Revised
10.12.12	**Bid Set**

Sheet title:
DEMOLITION WEST & EAST ELEVATIONS
Scale: 1/8" = 1'-0"

Seal and Signature:
REGISTERED ARCHITECT
Minh Ha Tram Chu Hoang
030935
STATE OF NEW YORK

Date: 09.28.12
Project No.: 0902
Dwg By: MP
Chk By: MH

Dwg No:
DM-203.00

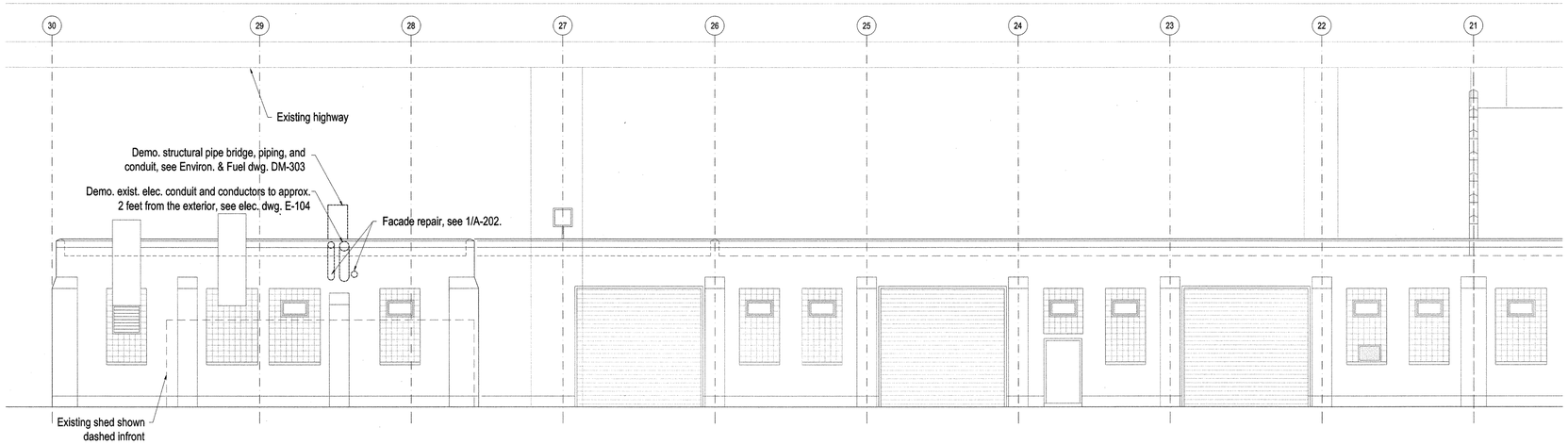

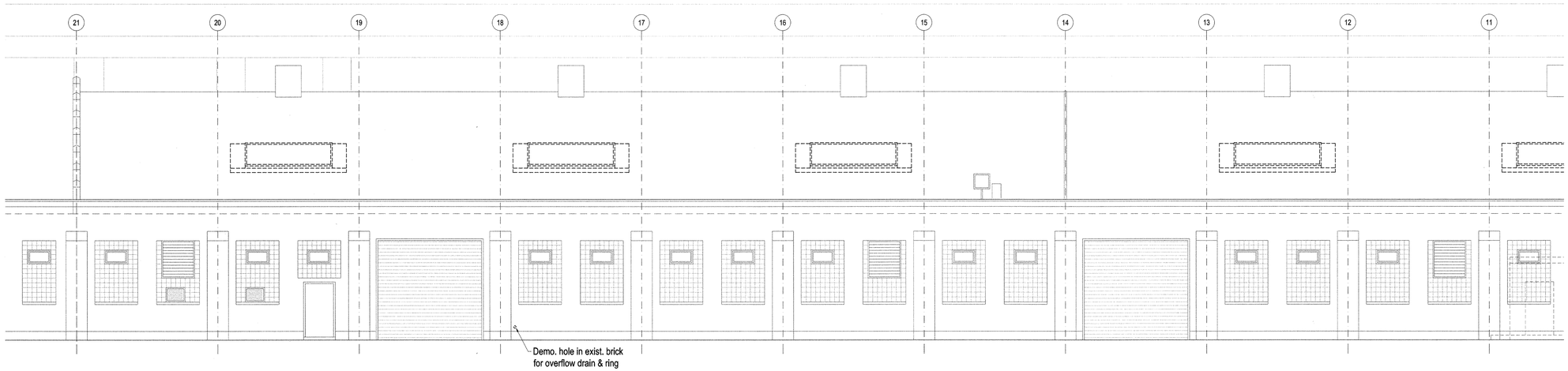

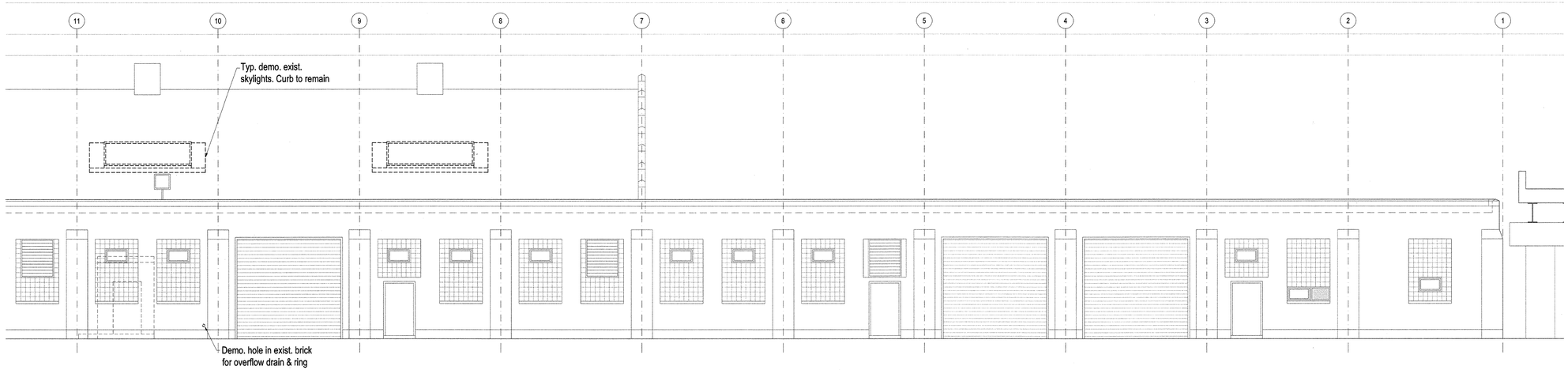

1 DEMO NORTH ELEVATION
1/8" = 1'-0"

KEY PLAN AREA

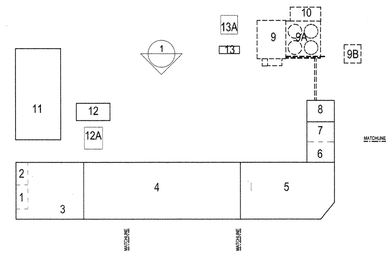

NEW YORK CITY DEPARTMENT OF DESIGN + CONSTRUCTION
DIVISION OF STRUCTURES
BUREAU OF ARCHITECTURE & ENGINEERING

PROJECT NAME:
HARPER ST. YARD

32-11 HARPER STREET,
QUEENS, NY 11368
CAPITAL PROJECT NUMBER
HWQF027C

Architect:
nARCHITECTS, PLLC
68 JAY #317
BROOKLYN, NY 11201
T: 718.260.0845 F: 718.260.0847

MEP Engineer:
PLUS GROUP
231 WEST 29th STREET, RM. 706
NEW YORK, NY 10001
T: 212.233.2700 F: 212.233.2727

Structural Engineer:
ROBERT SILMAN ASSOCIATES
88 UNIVERSITY PLACE
NEW YORK, NY 10003
T: 212.620.7970 F: 212.620.8157

Environmental & Fuel Consultant:
URS
77 GOODELL STREET
BUFFALO, NY 14203
T: 716.856.5636 F: 716.856.2545

Code Consultant:
J CALLAHAN CONSULTING INC.
299 BROADWAY SUITE 1420
NEW YORK, NY 10007
T: 212.766.2115 F: 212.766.2787

Date:	Issue:
05.19.10	75% SD
06.02.10	80% SD
11.17.10	100% Schematic Design
02.09.11	100% Design Dev.
04.06.11	75% CD
03.07.12	100% CD
06.06.12	100% CD - Revised
10.12.12	**Bid Set**

Sheet title:
DEMOLITION
NORTH ELEVATION

Scale: 1/8" = 1'-0"

Seal and Signature:
REGISTERED ARCHITECT
Minh Ha Tram Chu Hoang
030935
STATE OF NEW YORK

Date: 09.28.12
Project No.: 0902
Dwg By: MP
Chk By: MH

Dwg No:
DM-202.00

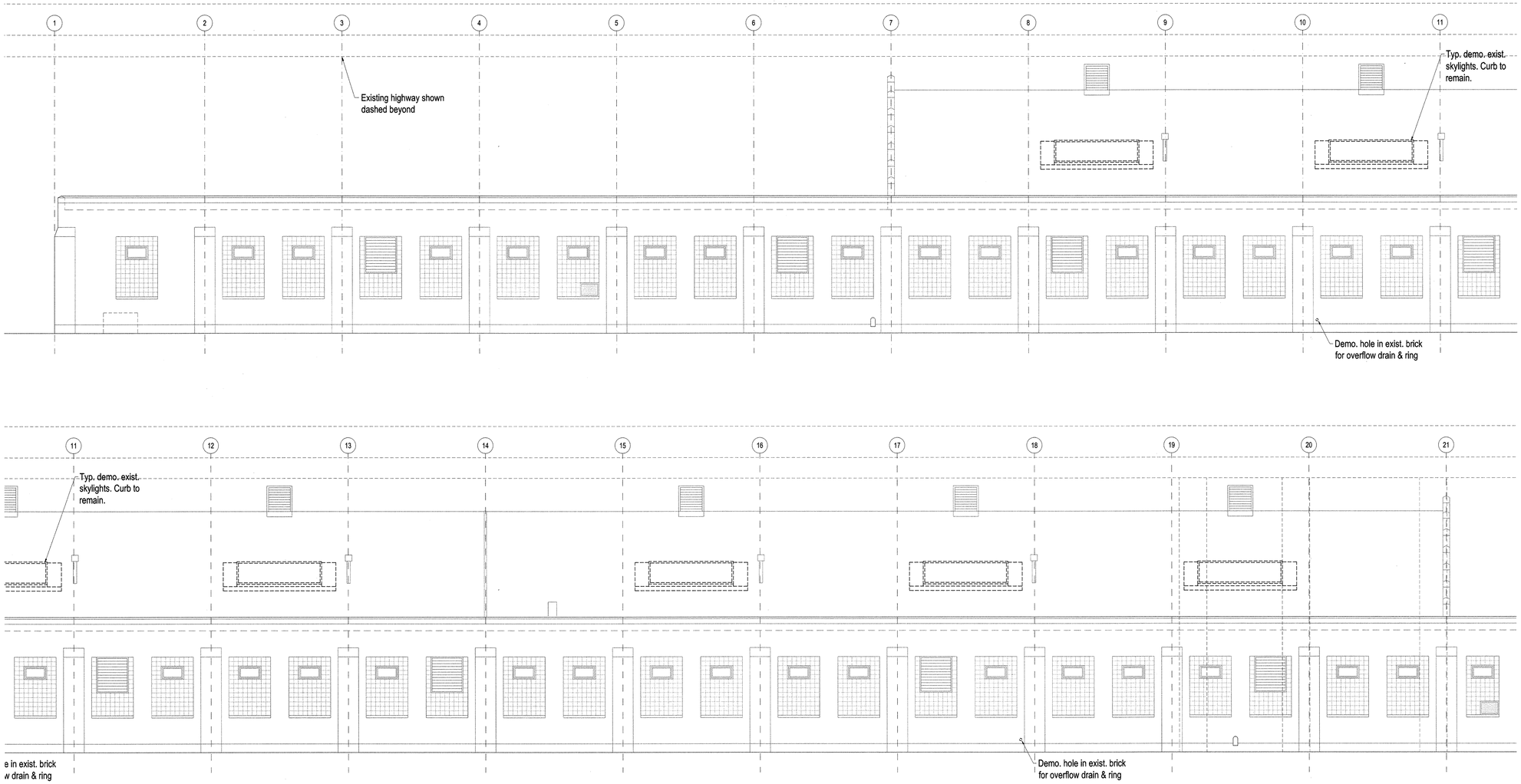

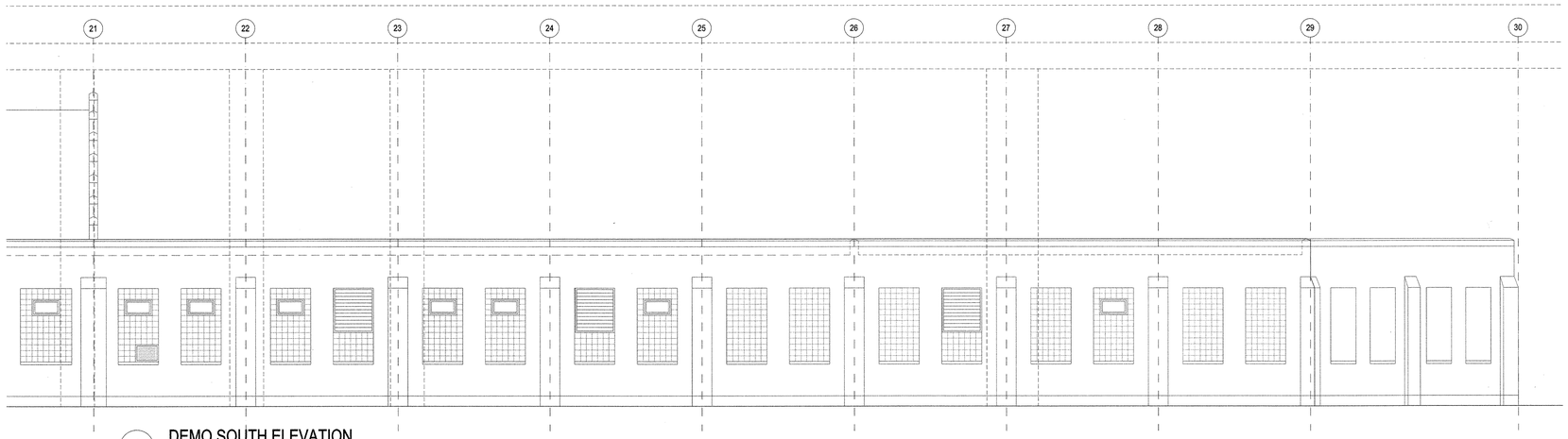

1 DEMO SOUTH ELEVATION
1/8" = 1'-0"

KEY PLAN AREA

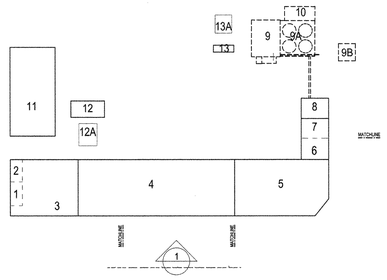

NEW YORK CITY DEPARTMENT OF DESIGN + CONSTRUCTION
DIVISION OF STRUCTURES
BUREAU OF ARCHITECTURE & ENGINEERING

PROJECT NAME:
HARPER ST. YARD

32-11 HARPER STREET,
QUEENS, NY 11368
CAPITAL PROJECT NUMBER
HWQF027C

Architect:
nARCHITECTS, PLLC
68 JAY #317
BROOKLYN, NY 11201
T: 718.260.0845 F: 718.260.0847

MEP Engineer:
PLUS GROUP
231 WEST 29th STREET, RM. 706
NEW YORK, NY 10001
T: 212.233.2700 F: 212.233.2727

Structural Engineer:
ROBERT SILMAN ASSOCIATES
88 UNIVERSITY PLACE
NEW YORK, NY 10003
T: 212.620.7970 F: 212.620.8157

Environmental & Fuel Consultant:
URS
77 GOODELL STREET
BUFFALO, NY 14203
T: 716.856.5636 F: 716.856.2545

Code Consultant:
J CALLAHAN CONSULTING INC.
299 BROADWAY SUITE 1420
NEW YORK, NY 10007
T: 212.766.2115 F: 212.766.2787

Date:	Issue:
05.19.10	75% SD
06.02.10	80% SD
11.17.10	100% Schematic Design
02.09.11	100% Design Dev.
04.06.11	75% CD
03.07.12	100% CD
06.06.12	100% CD - Revised
10.12.12	**Bid Set**

Sheet title:
DEMOLITION
SOUTH ELEVATION
Scale: 1/8" = 1'-0"

Seal and Signature:
REGISTERED ARCHITECT
Hung Hai Tram Chu Hoang
030935
STATE OF NEW YORK

Date: 09.28.12
Project No.: 0902
Dwg By: MP
Chk By: MH

Dwg No:
DM-201.00

ROOF PLAN NOTES

1. CONTRACTOR SHALL BE RESPONSIBLE FOR COORDINATING THE WORK OF ALL TRADES AND SUBCONTRACTORS.

ROOF PLAN DRAWING KEY

- Exist. roof drain
- New roof drain w/ overflow
- Exist. roof vent
- Exist roof vent w/ new flashing
- Slope — Proposed slope of new roofing
- New skylight with impact resistant guard
- Exist. light to remain

KEY PLAN AREA

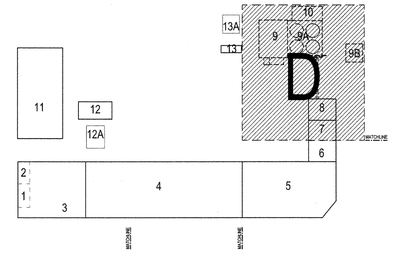

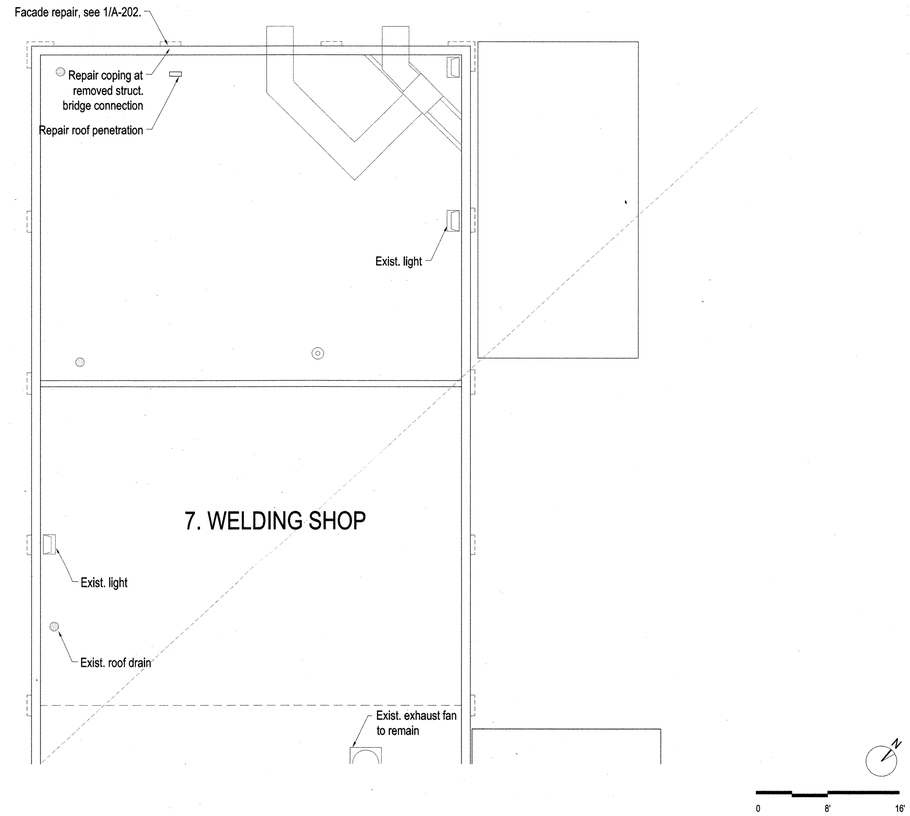

NEW YORK CITY DEPARTMENT OF DESIGN + CONSTRUCTION
DIVISION OF STRUCTURES
BUREAU OF ARCHITECTURE & ENGINEERING

PROJECT NAME:
HARPER ST. YARD

32-11 HARPER STREET,
QUEENS, NY 11368
CAPITAL PROJECT NUMBER
HWQF027C

Architect:
nARCHITECTS, PLLC
68 JAY #317
BROOKLYN, NY 11201
T: 718.260.0845 F: 718.260.0847

MEP Engineer:
PLUS GROUP
231 WEST 29th STREET, RM. 706
NEW YORK, NY 10001
T: 212.233.2700 F: 212.233.2727

Structural Engineer:
ROBERT SILMAN ASSOCIATES
88 UNIVERSITY PLACE
NEW YORK, NY 10003
T: 212.620.7970 F: 212.620.8157

Environmental & Fuel Consultant:
URS
77 GOODELL STREET
BUFFALO, NY 14203
T: 716.856.5636 F: 716.856.2545

Code Consultant:
J CALLAHAN CONSULTING INC.
299 BROADWAY SUITE 1420
NEW YORK, NY 10007
T: 212.766.2115 F: 212.766.2787

Date:	Issue:
05.19.10	75% SD
06.02.10	80% SD
11.17.10	100% Schematic Design
02.09.11	100% Design Dev.
04.06.11	75% CD
03.07.12	100% CD
06.06.12	100% CD - Revised
10.12.12	**Bid Set**

Sheet title:
ROOF PARTIAL PLAN "D"

Scale: 1/8" = 1'-0"

Seal and Signature:
REGISTERED ARCHITECT
Mimi HaTram Chu Hoang
030935
STATE OF NEW YORK

Date: 09.28.12
Project No.: 0902
Dwg By: MP
Chk By: MH

Dwg No:
A-123.00

ROOF PLAN NOTES

1. CONTRACTOR SHALL BE RESPONSIBLE FOR COORDINATING THE WORK OF ALL TRADES AND SUBCONTRACTORS.

ROOF PLAN DRAWING KEY

- Exist. roof drain
- New roof drain w/ overflow
- Exist. roof vent
- Exist roof vent w/ new flashing
- Slope — Proposed slope of new roofing
- New skylight with impact resistant guard
- Exist. light to remain

KEY PLAN AREA

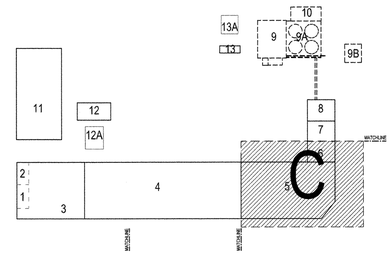

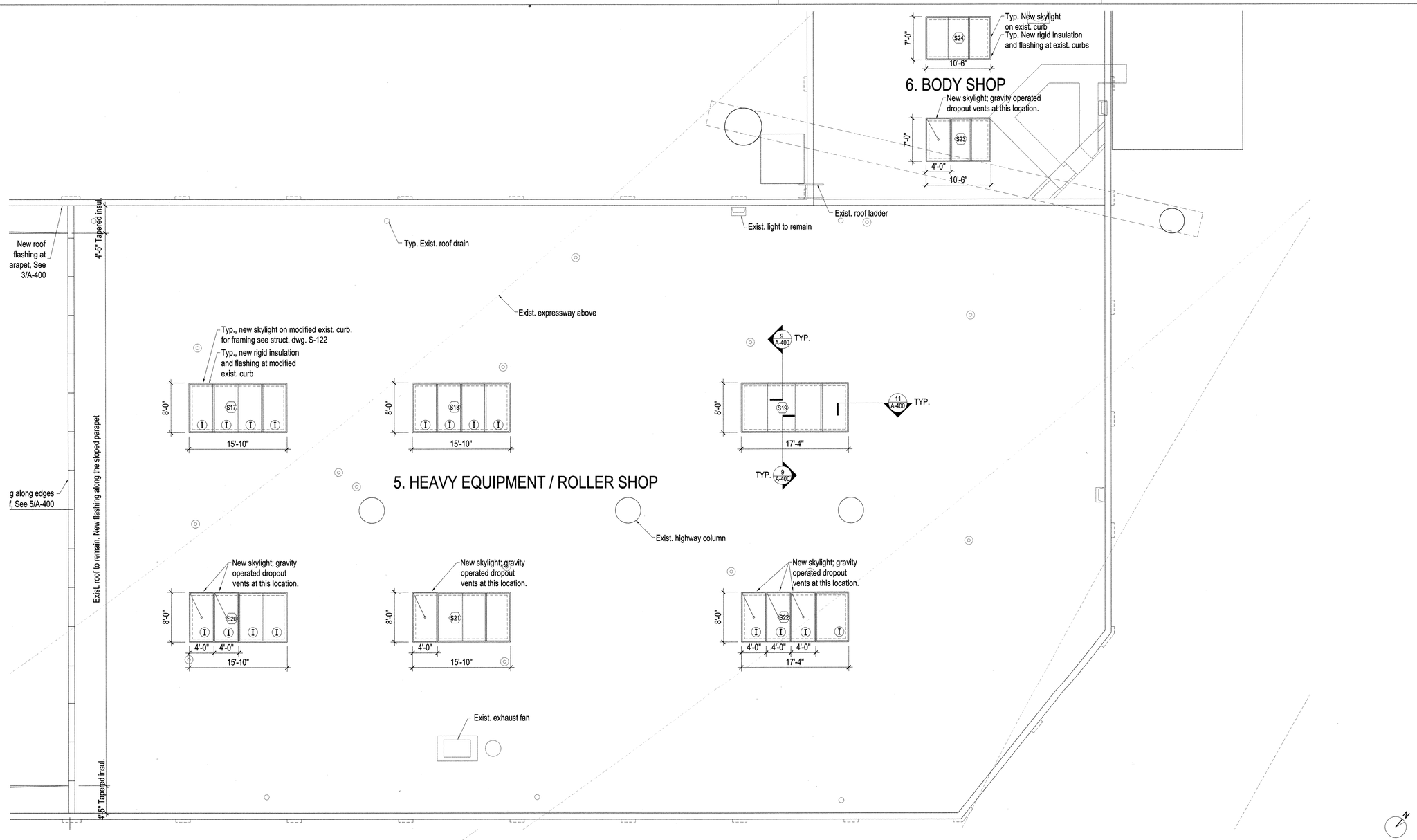

NEW YORK CITY DEPARTMENT OF DESIGN + CONSTRUCTION
DIVISION OF STRUCTURES
BUREAU OF ARCHITECTURE & ENGINEERING

PROJECT NAME:
HARPER ST. YARD

32-11 HARPER STREET,
QUEENS, NY 11368
CAPITAL PROJECT NUMBER
HWQF027C

Architect:
nARCHITECTS, PLLC
68 JAY #317
BROOKLYN, NY 11201
T: 718.260.0845 F: 718.260.0847

MEP Engineer:
PLUS GROUP
231 WEST 29th STREET, RM. 706
NEW YORK, NY 10001
T: 212.233.2700 F: 212.233.2727

Structural Engineer:
ROBERT SILMAN ASSOCIATES
88 UNIVERSITY PLACE
NEW YORK, NY 10003
T: 212.620.7970 F: 212.620.8157

Environmental & Fuel Consultant:
URS
77 GOODELL STREET
BUFFALO, NY 14203
T: 716.856.5636 F: 716.856.2545

Code Consultant:
J CALLAHAN CONSULTING INC.
299 BROADWAY SUITE 1420
NEW YORK, NY 10007
T: 212.766.2115 F: 212.766.2787

Date:	Issue:
05.19.10	75% SD
06.02.10	80% SD
11.17.10	100% Schematic Design
02.09.11	100% Design Dev.
04.06.11	75% CD
03.07.12	100% CD
06.06.12	100% CD - Revised
10.12.12	**Bid Set**

Sheet title:
ROOF PARTIAL PLAN "C"

Scale: 1/8" = 1'-0"

Seal and Signature:
REGISTERED ARCHITECT
Minh HaTram Chu Hoang
030935
STATE OF NEW YORK

Date: 09.28.12
Project No.: 0902
Dwg By: MP
Chk By: MH

Dwg No:
A-122.00

ROOF PLAN NOTES

1. CONTRACTOR SHALL BE RESPONSIBLE FOR COORDINATING THE WORK OF ALL TRADES AND SUBCONTRACTORS.

ROOF PLAN DRAWING KEY

- Exist. roof drain
- New roof drain w/ overflow
- Exist. roof vent
- Exist roof vent w/ new flashing
- Slope — Proposed slope of new roofing
- New skylight with impact resistant guard
- Exist. light to remain

KEY PLAN AREA

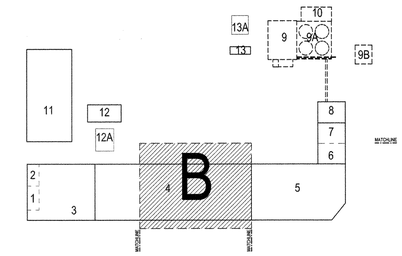

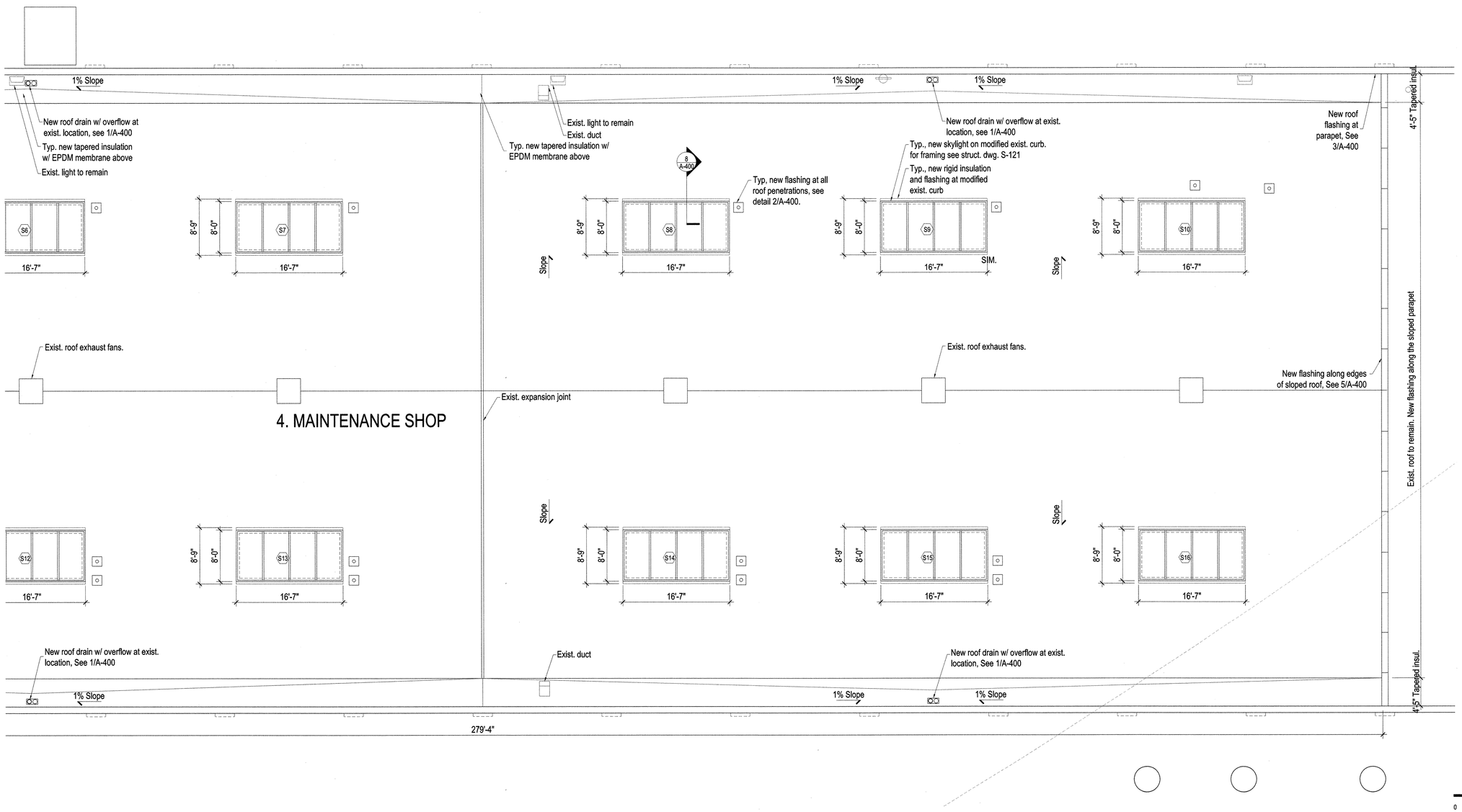

NEW YORK CITY DEPARTMENT OF DESIGN + CONSTRUCTION
DIVISION OF STRUCTURES
BUREAU OF ARCHITECTURE & ENGINEERING

PROJECT NAME:
HARPER ST. YARD

32-11 HARPER STREET,
QUEENS, NY 11368
CAPITAL PROJECT NUMBER
HWQF027C

Architect:
nARCHITECTS, PLLC
68 JAY #317
BROOKLYN, NY 11201
T: 718.260.0845 F: 718.260.0847

MEP Engineer:
PLUS GROUP
231 WEST 29th STREET, RM. 706
NEW YORK, NY 10001
T: 212.233.2700 F: 212.233.2727

Structural Engineer:
ROBERT SILMAN ASSOCIATES
88 UNIVERSITY PLACE
NEW YORK, NY 10003
T: 212.620.7970 F: 212.620.8157

Environmental & Fuel Consultant:
URS
77 GOODELL STREET
BUFFALO, NY 14203
T: 716.856.5636 F: 716.856.2545

Code Consultant:
J CALLAHAN CONSULTING INC.
299 BROADWAY SUITE 1420
NEW YORK, NY 10007
T: 212.766.2115 F: 212.766.2787

Date:	Issue:
05.19.10	75% SD
06.02.10	80% SD
11.17.10	100% Schematic Design
02.09.11	100% Design Dev.
04.06.11	75% CD
03.07.12	100% CD
06.06.12	100% CD - Revised
10.12.12	**Bid Set**

Sheet title:
ROOF PARTIAL PLAN "B"

Scale: 1/8" = 1'-0"

Seal and Signature:
REGISTERED ARCHITECT Minh HaTram Chu Huang 030935 STATE OF NEW YORK

Date: 09.28.12
Project No.: 0902
Dwg By: MP
Chk By: MH

Dwg No:
A-121.00

ROOF PLAN NOTES

1. CONTRACTOR SHALL BE RESPONSIBLE FOR COORDINATING THE WORK OF ALL TRADES AND SUBCONTRACTORS.

ROOF PLAN DRAWING KEY

- Exist. roof drain
- New roof drain w/ overflow
- Exist. roof vent
- Exist roof vent w/ new flashing
- Slope — Proposed slope of new roofing
- New skylight with impact resistant guard
- Exist. light to remain

KEY PLAN AREA

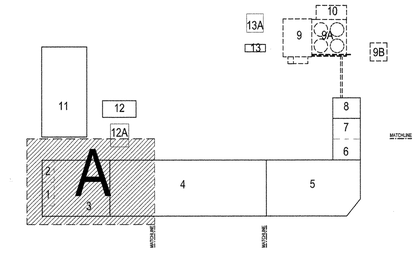

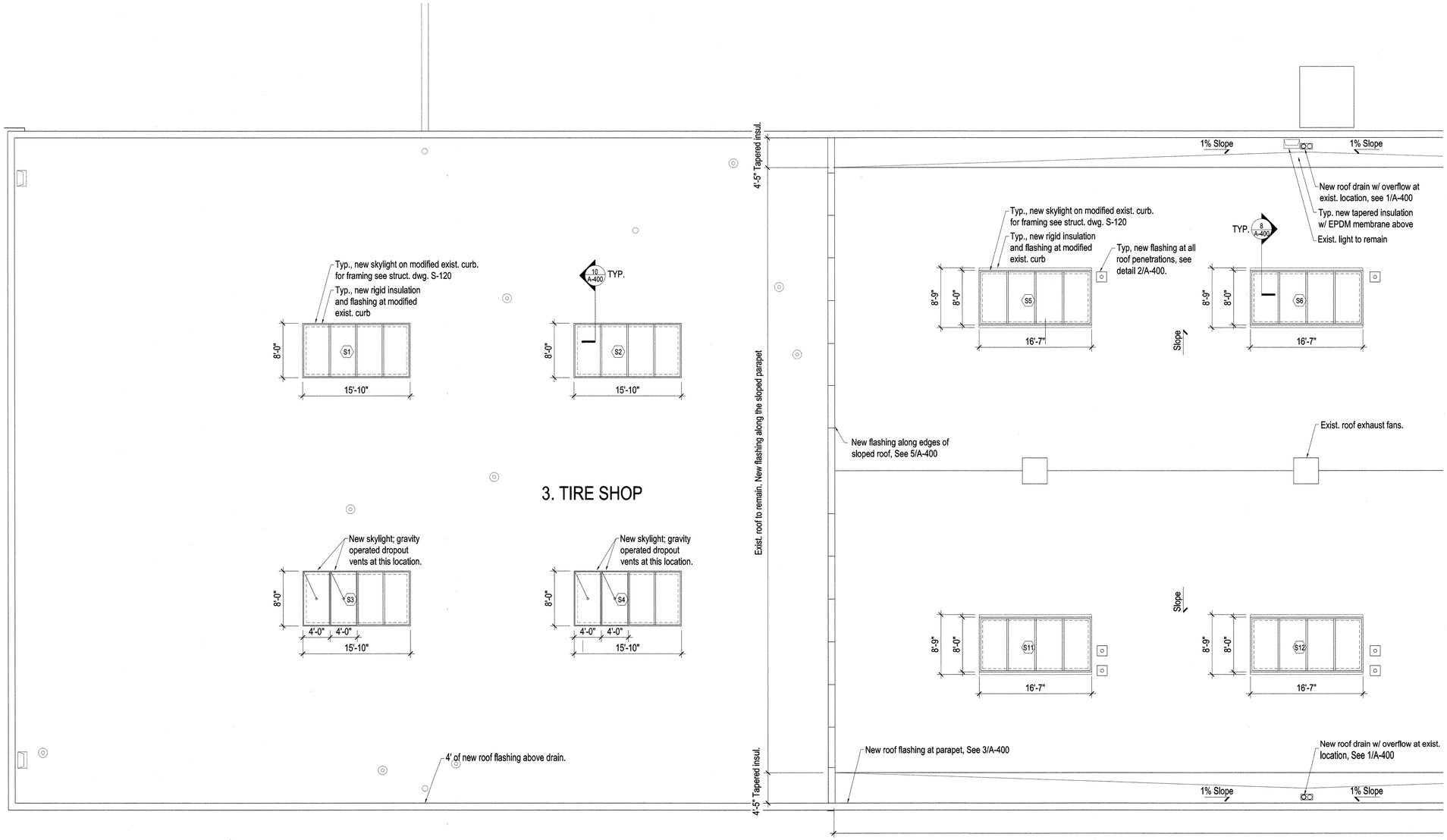

NEW YORK CITY DEPARTMENT OF DESIGN + CONSTRUCTION
DIVISION OF STRUCTURES
BUREAU OF ARCHITECTURE & ENGINEERING

PROJECT NAME:
HARPER ST. YARD

32-11 HARPER STREET,
QUEENS, NY 11368
CAPITAL PROJECT NUMBER
HWQF027C

Architect:
nARCHITECTS, PLLC
68 JAY #317
BROOKLYN, NY 11201
T: 718.260.0845 F: 718.260.0847

MEP Engineer:
PLUS GROUP
231 WEST 29th STREET, RM. 706
NEW YORK, NY 10001
T: 212.233.2700 F: 212.233.2727

Structural Engineer:
ROBERT SILMAN ASSOCIATES
88 UNIVERSITY PLACE
NEW YORK, NY 10003
T: 212.620.7970 F: 212.620.8157

Environmental & Fuel Consultant:
URS
77 GOODELL STREET
BUFFALO, NY 14203
T: 716.856.5636 F: 716.856.2545

Code Consultant:
J CALLAHAN CONSULTING INC.
299 BROADWAY SUITE 1420
NEW YORK, NY 10007
T: 212.766.2115 F: 212.766.2787

Date:	Issue:
05.19.10	75% SD
06.02.10	80% SD
11.17.10	100% Schematic Design
02.09.11	100% Design Dev.
04.06.11	75% CD
03.07.12	100% CD
06.06.12	100% CD - Revised
10.12.12	**Bid Set**

Sheet title:
ROOF PARTIAL PLAN "A"

Scale: 1/8" = 1'-0"

Seal and Signature:
REGISTERED ARCHITECT
Minh Nha Tram Chu Hoang
030935
STATE OF NEW YORK

Date: 09.28.12
Project No.: 0902
Dwg By: MP
Chk By: MH

Dwg No:
A-120.00

REFLECTED CEILING PLAN NOTES

1. COORDINATE ALL OUTLET & SWITCH LOCATIONS WHERE INDICATED ON INTERIOR ELEVATIONS.
2. ALL SWITCHES TO BE LOCATED 3'-4" A.F.F. , TO THE CENTER OF THE SWITCH PLATE,UNLESS OTHERWISE NOTED ON THE INTERIOR ELEVATIONS.
3. ALL ADJACENT SWITCHES AND ALL ADJACENT OUTLETS TO BE GANGED TOGETHER, UNLESS OTHERWISE NOTED ON THE INTERIOR ELEVATIONS.
4. ALL NEW FLUORESCENT LIGHTS TO HAVE DAYLIGHT SPECTRUM BULBS.

ELECTRICAL DRAWING KEY

- New duplex elec. outlet - mtd. as indicated on drawings
- GFCI — New duplex elec. outlet w/ ground fault circuit interrupter - mtd. as indicated on drawings
- New quad elec. outlet mtd. as indicated on drawings - grounded
- New tel / data jack duplex
- New single switch
- D — New single, dimmer switch
- OC — New switch w/ occupancy sensor
- Ceiling mounted occupancy sensor

LIGHTING DRAWING KEY

- New LED linear recessed fixture
- EM — New LED linear recessed fixture with emergency battery ballast
- New exterior wall mounted LED fixture
- Double LED cobra head mounted on DOT cobra pole

REFLECTED CEILING PLAN DRAWING KEY

- Exist. wall
- New construction
- Exist. pendant light fixture

KEY PLAN AREA

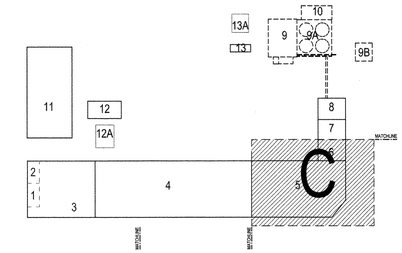

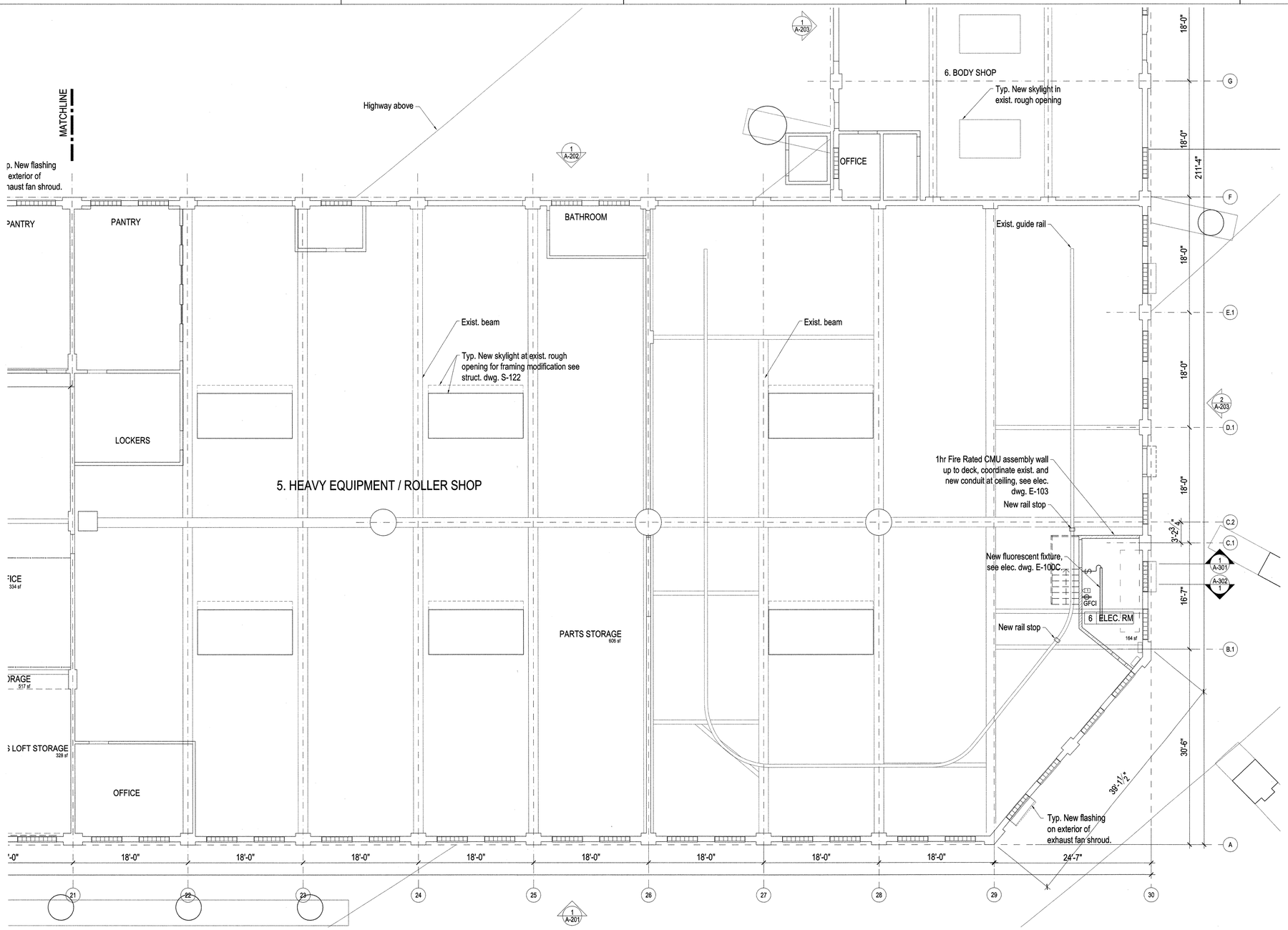

NEW YORK CITY DEPARTMENT OF DESIGN + CONSTRUCTION
DIVISION OF STRUCTURES
BUREAU OF ARCHITECTURE & ENGINEERING

PROJECT NAME:
HARPER ST. YARD

32-11 HARPER STREET,
QUEENS, NY 11368
CAPITAL PROJECT NUMBER
HWQF027C

Architect:
nARCHITECTS, PLLC
68 JAY #317
BROOKLYN, NY 11201
T: 718.260.0845 F: 718.260.0847

MEP Engineer:
PLUS GROUP
231 WEST 29th STREET, RM. 706
NEW YORK, NY 10001
T: 212.233.2700 F: 212.233.2727

Structural Engineer:
ROBERT SILMAN ASSOCIATES
88 UNIVERSITY PLACE
NEW YORK, NY 10003
T: 212.620.7970 F: 212.620.8157

Environmental & Fuel Consultant:
URS
77 GOODELL STREET
BUFFALO, NY 14203
T: 716.856.5636 F: 716.856.2545

Code Consultant:
J CALLAHAN CONSULTING INC.
299 BROADWAY SUITE 1420
NEW YORK, NY 10007
T: 212.766.2115 F: 212.766.2787

Date:	Issue:
05.19.10	75% SD
06.02.10	80% SD
11.17.10	100% Schematic Design
02.09.11	100% Design Dev.
04.06.11	75% CD
03.07.12	100% CD
06.06.12	100% CD - Revised
10.12.12	**Bid Set**

Sheet title:
RCP FIRST FLOOR PARTIAL PLAN "C"

Scale: 1/8" = 1'-0"

Seal and Signature:
REGISTERED ARCHITECT Mimi HaTram Chu Hwang 030935 STATE OF NEW YORK

Date: 09.28.12
Project No.: 0902
Dwg By: MP
Chk By: MH

Dwg No:
A-112.00

REFLECTED CEILING PLAN NOTES

1. COORDINATE ALL OUTLET & SWITCH LOCATIONS WHERE INDICATED ON INTERIOR ELEVATIONS.
2. ALL SWITCHES TO BE LOCATED 3'-4" A.F.F. , TO THE CENTER OF THE SWITCH PLATE,UNLESS OTHERWISE NOTED ON THE INTERIOR ELEVATIONS.
3. ALL ADJACENT SWITCHES AND ALL ADJACENT OUTLETS TO BE GANGED TOGETHER, UNLESS OTHERWISE NOTED ON THE INTERIOR ELEVATIONS.
4. ALL NEW FLUORESCENT LIGHTS TO HAVE DAYLIGHT SPECTRUM BULBS.

ELECTRICAL DRAWING KEY

- New duplex elec. outlet - mtd. as indicated on drawings
- GFCI — New duplex elec. outlet w/ ground fault circuit interrupter - mtd. as indicated on drawings
- New quad elec. outlet mtd. as indicated on drawings - grounded
- New tel / data jack duplex
- New single switch
- PD — New single, dimmer switch
- OC — New switch w/ occupancy sensor
- Ceiling mounted occupancy sensor

LIGHTING DRAWING KEY

- New LED linear recessed fixture
- EM — New LED linear recessed fixture with emergency battery ballast
- New exterior wall mounted LED fixture
- Double LED cobra head mounted on DOT cobra pole

REFLECTED CEILING PLAN DRAWING KEY

- Exist. wall
- New construction
- Exist. pendant light fixture

KEY PLAN AREA

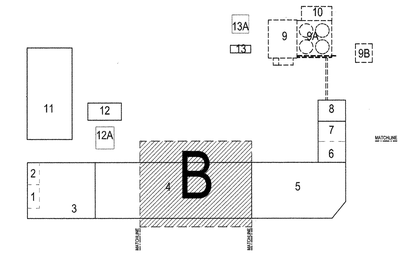

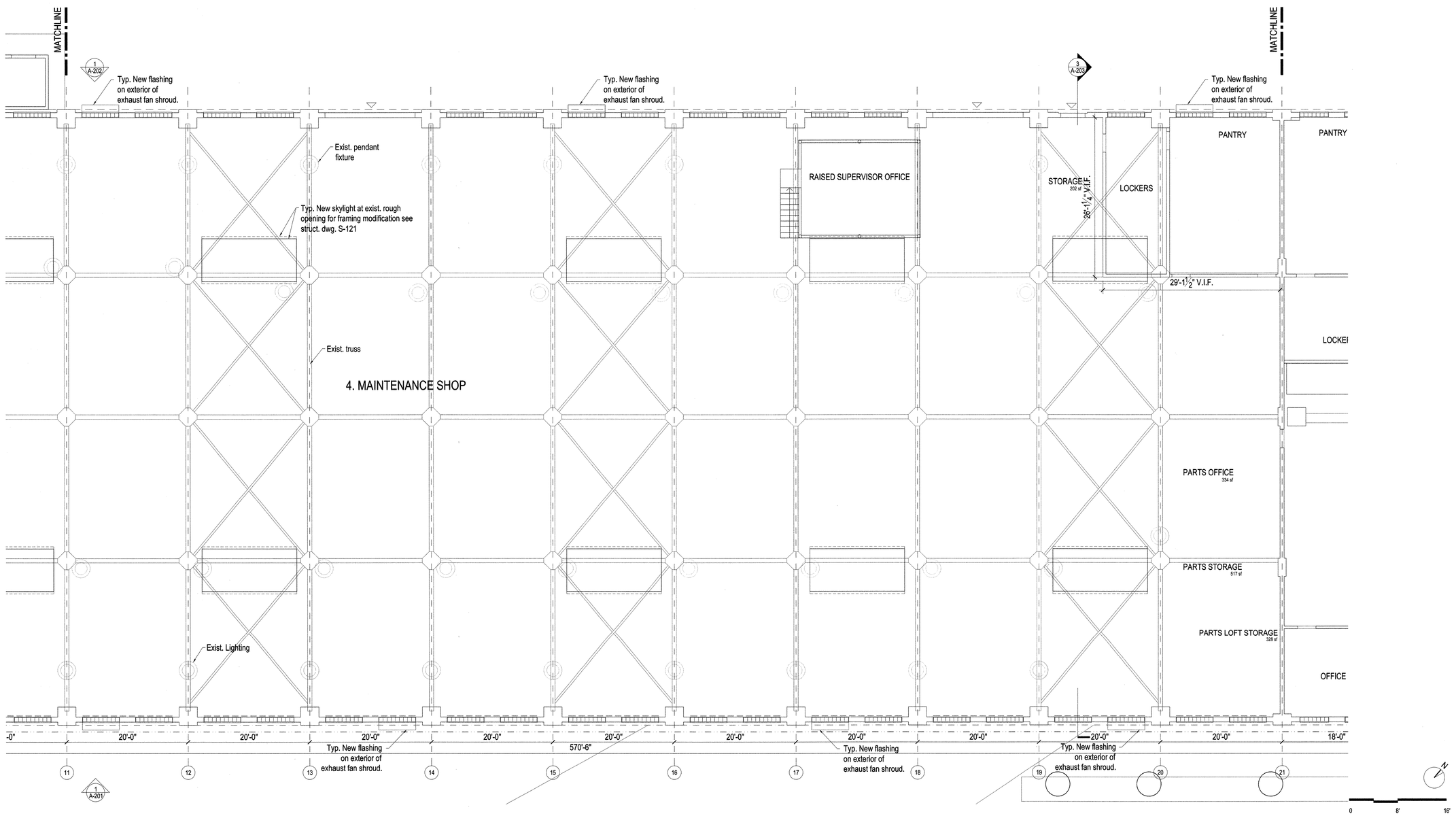

NEW YORK CITY DEPARTMENT OF DESIGN + CONSTRUCTION
DIVISION OF STRUCTURES
BUREAU OF ARCHITECTURE & ENGINEERING

PROJECT NAME:
HARPER ST. YARD

32-11 HARPER STREET,
QUEENS, NY 11368
CAPITAL PROJECT NUMBER
HWQF027C

Architect:
nARCHITECTS, PLLC
68 JAY #317
BROOKLYN, NY 11201
T: 718.260.0845 F: 718.260.0847

MEP Engineer:
PLUS GROUP
231 WEST 29th STREET, RM. 706
NEW YORK, NY 10001
T: 212.233.2700 F: 212.233.2727

Structural Engineer:
ROBERT SILMAN ASSOCIATES
88 UNIVERSITY PLACE
NEW YORK, NY 10003
T: 212.620.7970 F: 212.620.8157

Environmental & Fuel Consultant:
URS
77 GOODELL STREET
BUFFALO, NY 14203
T: 716.856.5636 F: 716.856.2545

Code Consultant:
J CALLAHAN CONSULTING INC.
299 BROADWAY SUITE 1420
NEW YORK, NY 10007
T: 212.766.2115 F: 212.766.2787

Date:	Issue:
05.19.10	75% SD
06.02.10	80% SD
11.17.10	100% Schematic Design
02.09.11	100% Design Dev.
04.06.11	75% CD
03.07.12	100% CD
06.06.12	100% CD - Revised
10.12.12	**Bid Set**

Sheet title:
RCP FIRST FLOOR PARTIAL PLAN "B"

Scale: 1/8" = 1'-0"

Seal and Signature:
REGISTERED ARCHITECT Mimi HaTram Chu Huang 030935 STATE OF NEW YORK

Date: 09.28.12
Project No.: 0902
Dwg By: MP
Chk By: MH

Dwg No:
A-111.00

REFLECTED CEILING PLAN NOTES

1. COORDINATE ALL OUTLET & SWITCH LOCATIONS WHERE INDICATED ON INTERIOR ELEVATIONS.
2. ALL SWITCHES TO BE LOCATED 3'-4" A.F.F. , TO THE CENTER OF THE SWITCH PLATE,UNLESS OTHERWISE NOTED ON THE INTERIOR ELEVATIONS.
3. ALL ADJACENT SWITCHES AND ALL ADJACENT OUTLETS TO BE GANGED TOGETHER, UNLESS OTHERWISE NOTED ON THE INTERIOR ELEVATIONS.
4. ALL NEW FLUORESCENT LIGHTS TO HAVE DAYLIGHT SPECTRUM BULBS.

ELECTRICAL DRAWING KEY

- New duplex elec. outlet - mtd. as indicated on drawings
- GFCI — New duplex elec. outlet w/ ground fault circuit interrupter - mtd. as indicated on drawings
- New quad elec. outlet mtd. as indicated on drawings - grounded
- New tel / data jack duplex
- New single switch
- D — New single, dimmer switch
- OC — New switch w/ occupancy sensor
- Ceiling mounted occupancy sensor

LIGHTING DRAWING KEY

- New LED linear recessed fixture
- EM — New LED linear recessed fixture with emergency battery ballast
- New exterior wall mounted LED fixture
- Double LED cobra head mounted on DOT cobra pole

REFLECTED CEILING PLAN DRAWING KEY

- Exist. wall
- New construction
- Exist. pendant light fixture

KEY PLAN AREA

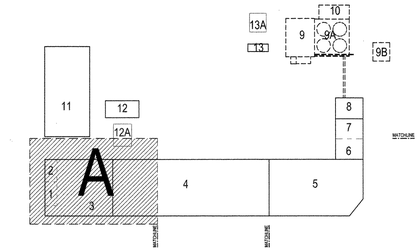

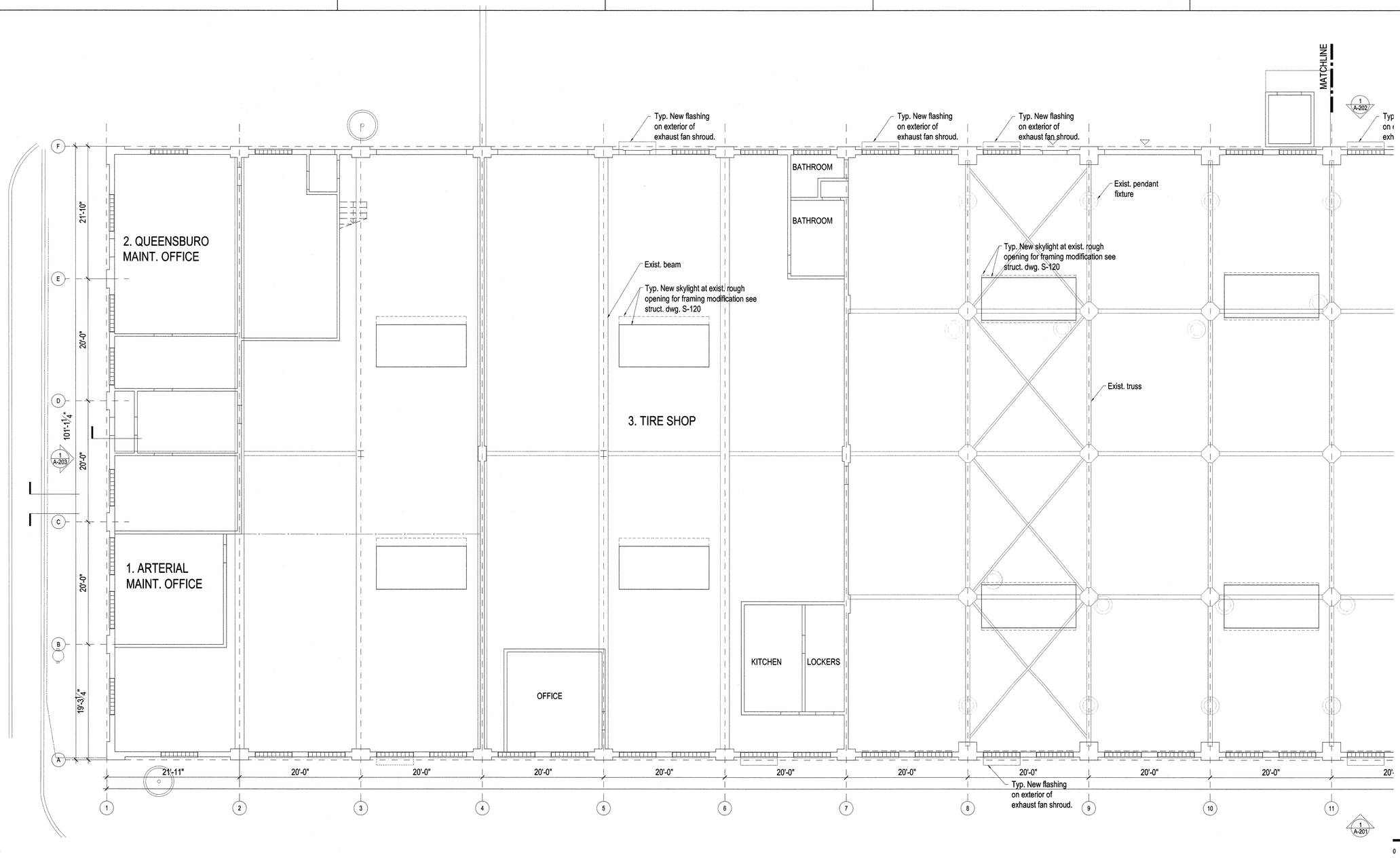

NEW YORK CITY DEPARTMENT OF DESIGN + CONSTRUCTION
DIVISION OF STRUCTURES
BUREAU OF ARCHITECTURE & ENGINEERING

PROJECT NAME:
HARPER ST. YARD

32-11 HARPER STREET,
QUEENS, NY 11368
CAPITAL PROJECT NUMBER
HWQF027C

Architect:
nARCHITECTS, PLLC
68 JAY #317
BROOKLYN, NY 11201
T: 718.260.0845 F: 718.260.0847

MEP Engineer:
PLUS GROUP
231 WEST 29th STREET, RM. 706
NEW YORK, NY 10001
T: 212.233.2700 F: 212.233.2727

Structural Engineer:
ROBERT SILMAN ASSOCIATES
88 UNIVERSITY PLACE
NEW YORK, NY 10003
T: 212.620.7970 F: 212.620.8157

Environmental & Fuel Consultant:
URS
77 GOODELL STREET
BUFFALO, NY 14203
T: 716.856.5636 F: 716.856.2545

Code Consultant:
J CALLAHAN CONSULTING INC.
299 BROADWAY SUITE 1420
NEW YORK, NY 10007
T: 212.766.2115 F: 212.766.2787

Date:	Issue:
05.19.10	75% SD
06.02.10	80% SD
11.17.10	100% Schematic Design
02.09.11	100% Design Dev.
04.06.11	75% CD
03.07.12	100% CD
06.06.12	100% CD - Revised
10.12.12	**Bid Set**

Sheet title:
RCP FIRST FLOOR PARTIAL PLAN "A"
Scale: 1/8" = 1'-0"

Seal and Signature:
REGISTERED ARCHITECT Minh Ha Tram Chu Hoang 030935 STATE OF NEW YORK

Date: 09.28.12
Project No.: 0902
Dwg By: MP
Chk By: MH

Dwg No:
A-110.00

FIRST FLOOR PLAN NOTES

1. CONTRACTOR SHALL BE RESPONSIBLE FOR COORDINATING THE WORK OF ALL TRADES AND SUBCONTRACTORS.

2. ALL SOIL AND DEBRIS EXCAVATED DURING DEMOLITION WORK INCLUDING TRENCHING ACTIVITIES SHALL BE CONSIDERED "CONTAMINATED HISTORIC FILL" AND SHALL BE DISPOSED OF AT AN APPROPRIATE LICENSED/PERMITTED DISPOSAL FACILITY

LIGHTING DRAWING KEY

- New LED linear recessed fixture
- EM — New LED linear recessed fixture with emergency battery ballast
- New exterior wall mounted LED fixture
- Double LED cobra head mounted on DOT cobra pole

FLOOR PLAN DRAWING KEY

- Exist. wall
- New construction
- Exist. door to remain
- New door

FLOOR FINISH KEY

- 1 — New topping slab, see Struct. dwgs.
- 2 — New polished conc. topping slab

WALL FINISH KEY

- 1 — 6" CMU, Ptd. both sides
- 2 — HdWd veneer on ply

KEY PLAN AREA

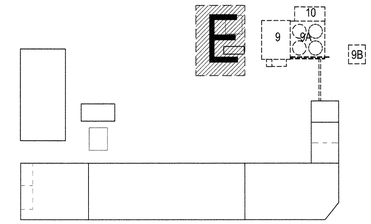

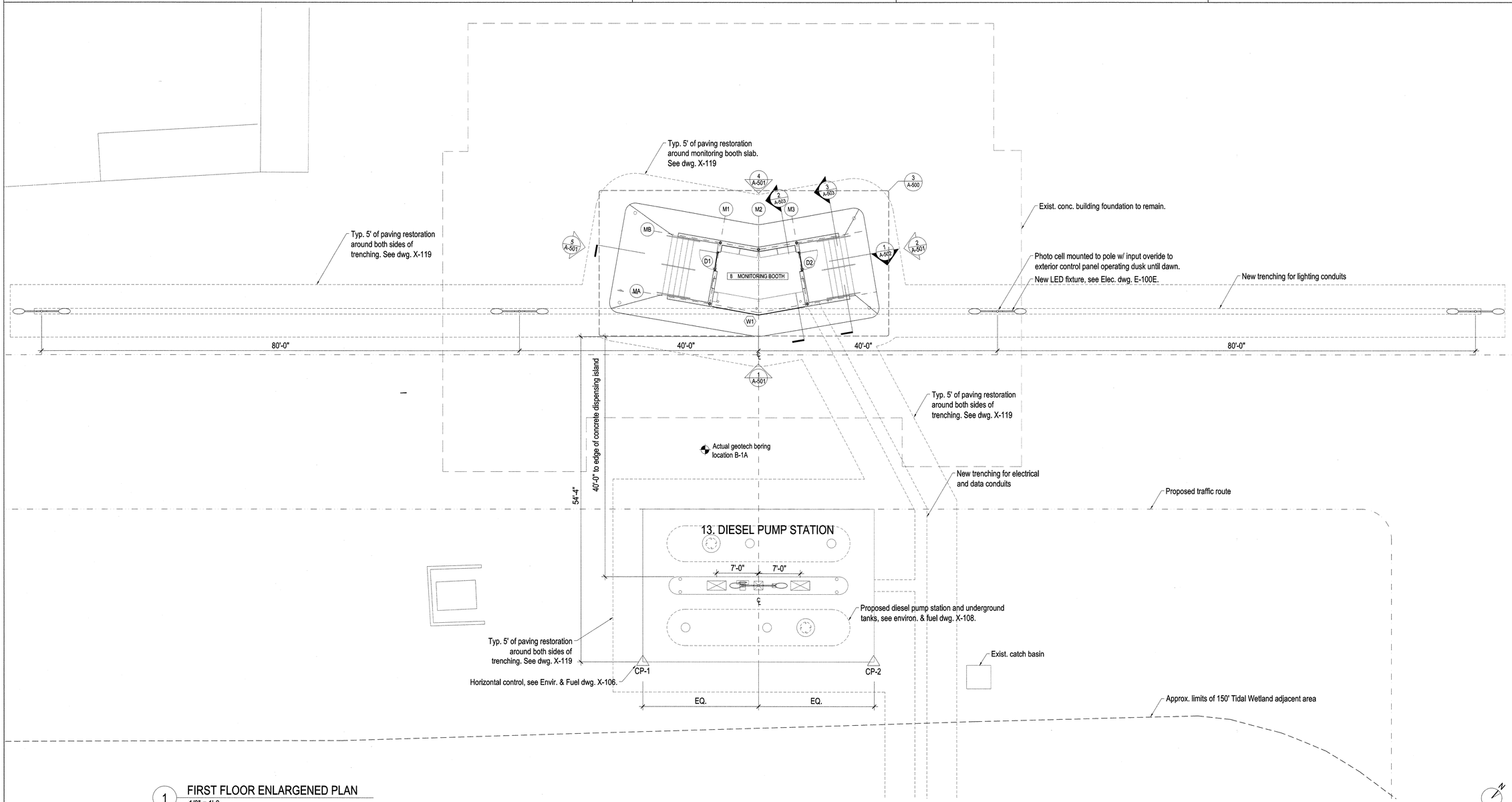

1 FIRST FLOOR ENLARGENED PLAN
1/8" = 1'-0

NEW YORK CITY DEPARTMENT OF DESIGN + CONSTRUCTION
DIVISION OF STRUCTURES
BUREAU OF ARCHITECTURE & ENGINEERING

PROJECT NAME:
HARPER ST. YARD

32-11 HARPER STREET,
QUEENS, NY 11368
CAPITAL PROJECT NUMBER
HWQF027C

Architect:
nARCHITECTS, PLLC
68 JAY #317
BROOKLYN, NY 11201
T: 718.260.0845 F: 718.260.0847

MEP Engineer:
PLUS GROUP
231 WEST 29th STREET, RM. 706
NEW YORK, NY 10001
T: 212.233.2700 F: 212.233.2727

Structural Engineer:
ROBERT SILMAN ASSOCIATES
88 UNIVERSITY PLACE
NEW YORK, NY 10003
T: 212.620.7970 F: 212.620.8157

Environmental & Fuel Consultant:
URS
77 GOODELL STREET
BUFFALO, NY 14203
T: 716.856.5636 F: 716.856.2545

Code Consultant:
J CALLAHAN CONSULTING INC.
299 BROADWAY SUITE 1420
NEW YORK, NY 10007
T: 212.766.2115 F: 212.766.2787

Date:	Issue:
05.19.10	75% SD
06.02.10	80% SD
11.17.10	100% Schematic Design
02.09.11	100% Design Dev.
04.06.11	75% CD
03.07.12	100% CD
06.06.12	100% CD - Revised
10.12.12	**Bid Set**

Sheet title:
FIRST FLOOR PARTIAL PLAN "E"

Scale: AS NOTED

Seal and Signature:

Date: 09.28.12
Project No.: 0902
Dwg By: MP
Chk By: MH

Dwg No:
A-103.00

FIRST FLOOR PLAN NOTES

1. CONTRACTOR SHALL BE RESPONSIBLE FOR COORDINATING THE WORK OF ALL TRADES AND SUBCONTRACTORS.

FLOOR PLAN DRAWING KEY

- Exist. wall
- New construction
- Exist. door to remain
- New door

FLOOR FINISH KEY

- 1 New topping slab, see Struct. dwgs.
- 2 New polished conc. topping slab

WALL FINISH KEY

- 1 6" CMU, Ptd. both sides
- 2 HdWd veneer on ply

KEY PLAN AREA

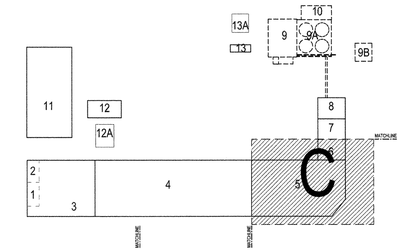

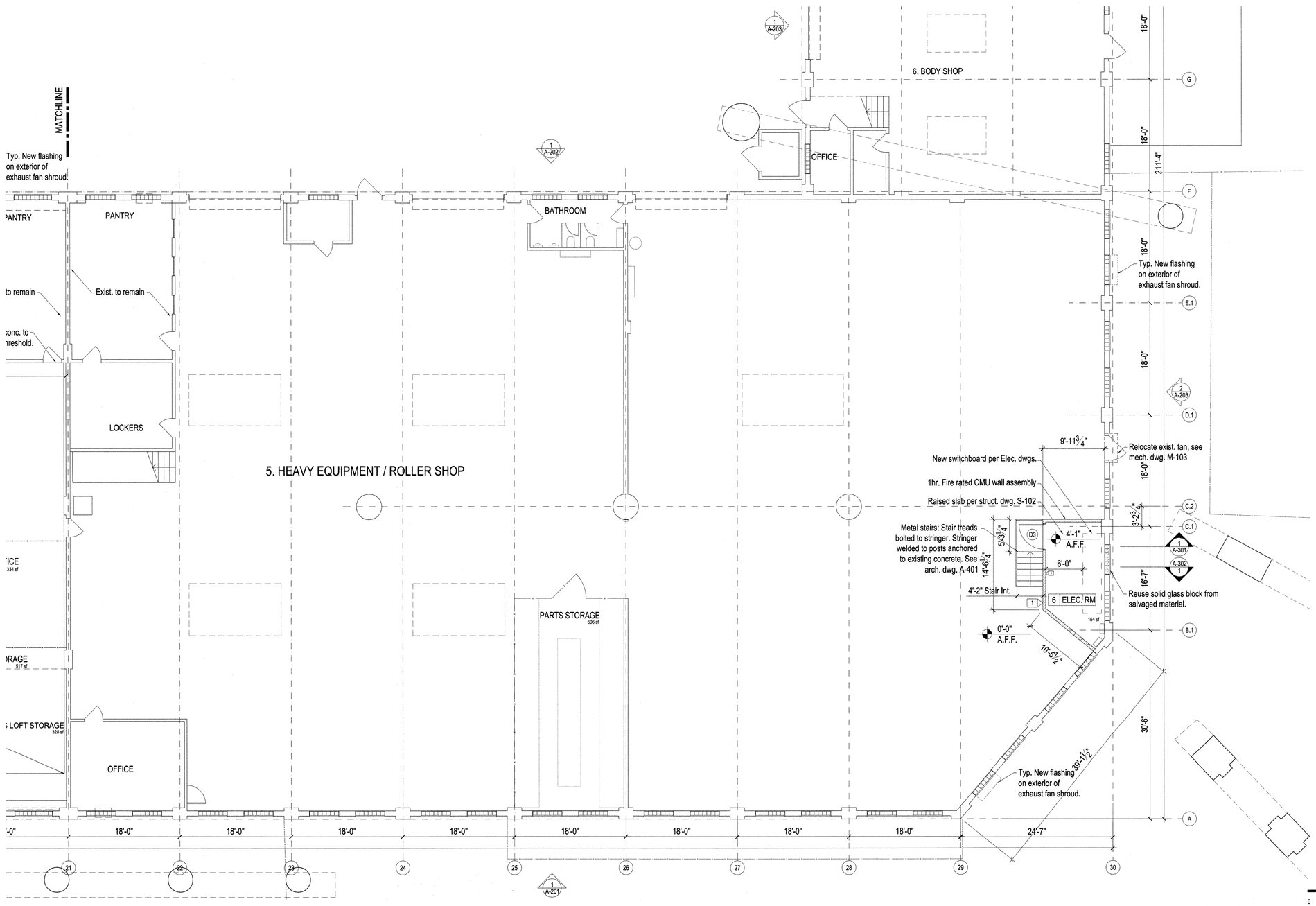

NEW YORK CITY DEPARTMENT OF DESIGN + CONSTRUCTION
DIVISION OF STRUCTURES
BUREAU OF ARCHITECTURE & ENGINEERING

PROJECT NAME:

HARPER ST. YARD

32-11 HARPER STREET,
QUEENS, NY 11368

CAPITAL PROJECT NUMBER

HWQF027C

Architect:

nARCHITECTS, PLLC
68 JAY #317
BROOKLYN, NY 11201
T: 718.260.0845 F: 718.260.0847

MEP Engineer:

PLUS GROUP
231 WEST 29th STREET, RM. 706
NEW YORK, NY 10001
T: 212.233.2700 F: 212.233.2727

Structural Engineer:

ROBERT SILMAN ASSOCIATES
88 UNIVERSITY PLACE
NEW YORK, NY 10003
T: 212.620.7970 F: 212.620.8157

Environmental & Fuel Consultant:

URS
77 GOODELL STREET
BUFFALO, NY 14203
T: 716.856.5636 F: 716.856.2545

Code Consultant:

J CALLAHAN CONSULTING INC.
299 BROADWAY SUITE 1420
NEW YORK, NY 10007
T: 212.766.2115 F: 212.766.2787

Date:	Issue:
05.19.10	75% SD
06.02.10	80% SD
11.17.10	100% Schematic Design
02.09.11	100% Design Dev.
04.06.11	75% CD
03.07.12	100% CD
06.06.12	100% CD - Revised
10.12.12	**Bid Set**

Sheet title:

FIRST FLOOR PARTIAL PLAN "C"

Scale: 1/8" = 1'0"

Seal and Signature:

REGISTERED ARCHITECT Minh Ha Tram Chu Hoang 030925 STATE OF NEW YORK

Date: 09.28.12

Project No.: 0902

Dwg By: MP

Chk By: MH

Dwg No:

A-102.00

FIRST FLOOR PLAN NOTES

1. CONTRACTOR SHALL BE RESPONSIBLE FOR COORDINATING THE WORK OF ALL TRADES AND SUBCONTRACTORS.

FLOOR PLAN DRAWING KEY

- Exist. wall
- New construction
- Exist. door to remain
- New door

FLOOR FINISH KEY

- 1 New topping slab, see Struct. dwgs.
- 2 New polished conc. topping slab

WALL FINISH KEY

- 1 6" CMU, Ptd. both sides
- 2 HdWd veneer on ply

KEY PLAN AREA

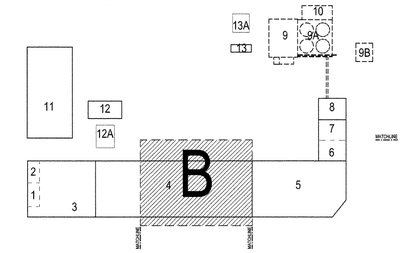

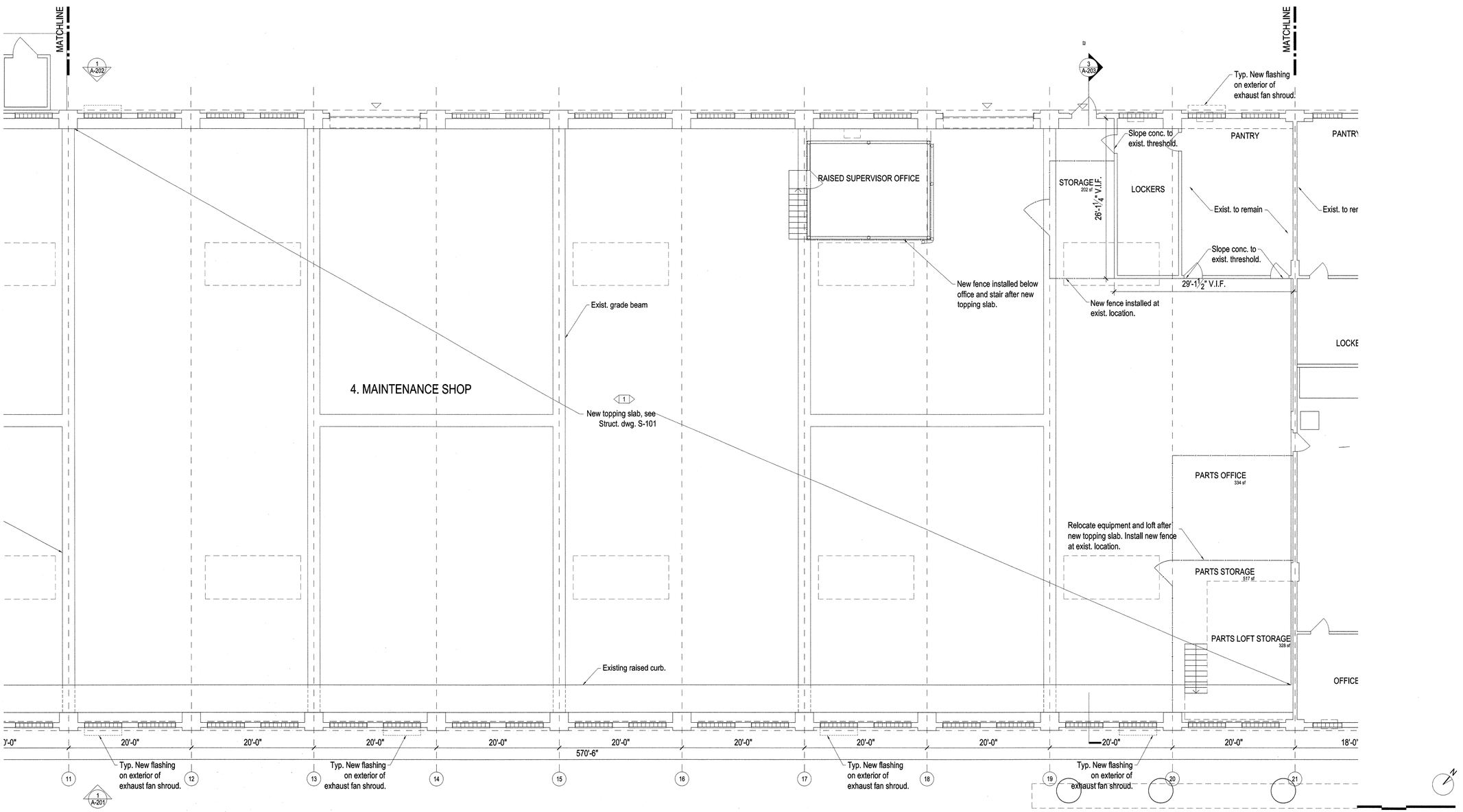

NEW YORK CITY DEPARTMENT OF DESIGN + CONSTRUCTION
DIVISION OF STRUCTURES
BUREAU OF ARCHITECTURE & ENGINEERING

PROJECT NAME:
HARPER ST. YARD

32-11 HARPER STREET,
QUEENS, NY 11368
CAPITAL PROJECT NUMBER
HWQF027C

Architect:
nARCHITECTS, PLLC
68 JAY #317
BROOKLYN, NY 11201
T: 718.260.0845 F: 718.260.0847

MEP Engineer:
PLUS GROUP
231 WEST 29th STREET, RM. 706
NEW YORK, NY 10001
T: 212.233.2700 F: 212.233.2727

Structural Engineer:
ROBERT SILMAN ASSOCIATES
88 UNIVERSITY PLACE
NEW YORK, NY 10003
T: 212.620.7970 F: 212.620.8157

Environmental & Fuel Consultant:
URS
77 GOODELL STREET
BUFFALO, NY 14203
T: 716.856.5636 F: 716.856.2545

Code Consultant:
J CALLAHAN CONSULTING INC.
299 BROADWAY SUITE 1420
NEW YORK, NY 10007
T: 212.766.2115 F: 212.766.2787

Date:	Issue:
05.19.10	75% SD
06.02.10	80% SD
11.17.10	100% Schematic Design
02.09.11	100% Design Dev.
04.06.11	75% CD
03.07.12	100% CD
06.06.12	100% CD - Revised
10.12.12	**Bid Set**

Sheet title:
FIRST FLOOR PARTIAL PLAN "B"

Scale: 1/8" = 1'-0"

Seal and Signature:
REGISTERED ARCHITECT Minh HaTram Chu Hoang 090935 STATE OF NEW YORK

Date: 09.28.12
Project No.: 0902
Dwg By: MP
Chk By: MH

Dwg No:
A-101.00

FIRST FLOOR PLAN NOTES

1. CONTRACTOR SHALL BE RESPONSIBLE FOR COORDINATING THE WORK OF ALL TRADES AND SUBCONTRACTORS.

FLOOR PLAN DRAWING KEY

- Exist. wall
- New construction
- Exist. door to remain
- New door

FLOOR FINISH KEY

- 1 New topping slab, see Struct. dwgs.
- 2 New polished conc. topping slab

WALL FINISH KEY

- 1 6" CMU, Ptd. both sides
- 2 HdWd veneer on ply

KEY PLAN AREA

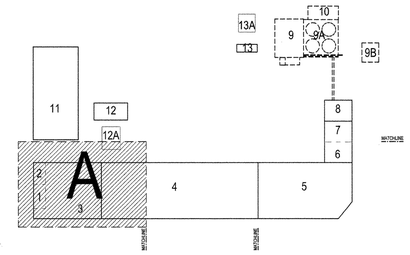

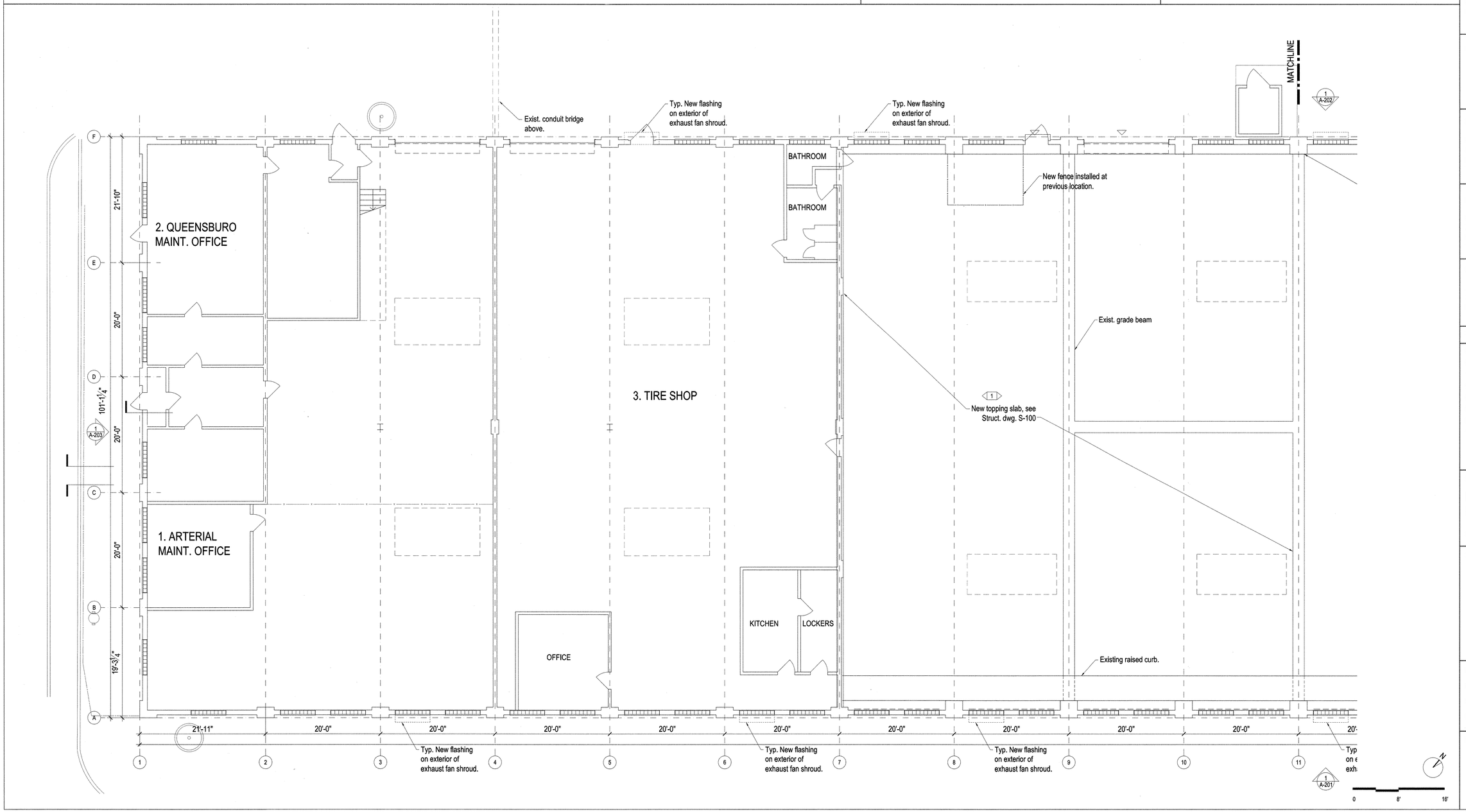

NEW YORK CITY DEPARTMENT OF DESIGN + CONSTRUCTION
DIVISION OF STRUCTURES
BUREAU OF ARCHITECTURE & ENGINEERING

PROJECT NAME:
HARPER ST. YARD

32-11 HARPER STREET,
QUEENS, NY 11368
CAPITAL PROJECT NUMBER
HWQF027C

Architect:
nARCHITECTS, PLLC
68 JAY #317
BROOKLYN, NY 11201
T: 718.260.0845 F: 718.260.0847

MEP Engineer:
PLUS GROUP
231 WEST 29th STREET, RM. 706
NEW YORK, NY 10001
T: 212.233.2700 F: 212.233.2727

Structural Engineer:
ROBERT SILMAN ASSOCIATES
88 UNIVERSITY PLACE
NEW YORK, NY 10003
T: 212.620.7970 F: 212.620.8157

Environmental & Fuel Consultant:
URS
77 GOODELL STREET
BUFFALO, NY 14203
T: 716.856.5636 F: 716.856.2545

Code Consultant:
J CALLAHAN CONSULTING INC.
299 BROADWAY SUITE 1420
NEW YORK, NY 10007
T: 212.766.2115 F: 212.766.2787

Date:	Issue:
05.19.10	75% SD
06.02.10	80% SD
11.17.10	100% Schematic Design
02.09.11	100% Design Dev.
04.06.11	75% CD
03.07.12	100% CD
06.06.12	100% CD - Revised
10.12.12	**Bid Set**

Sheet title:
FIRST FLOOR PARTIAL PLAN "A"

Scale: 1/8" = 1'-0"

Seal and Signature:
REGISTERED ARCHITECT
Mimi HaTram Chu Hoang
030935
STATE OF NEW YORK

Date: 09.28.12
Project No.: 0902
Dwg By: MP
Chk By: MH

Dwg No:
A-100.00

CONCRETE CURING NOTES

1. CONTRACTOR TO COORDINATE WITH OWNER THE ESTIMATED LENGTH AND PROCEDURE OF PHASING SCHEDULE.
2. CONTRACTOR TO DETERMINE ADEQUATE DURATION BASED UPON NORMAL WEIGHT CONCRETE WITH A MINIMUM COMPRESSIVE STRENGTH OF 4,000 PSI AT 28 DAYS.

FLOOR PLAN DRAWING KEY

- Exist. wall
- New construction
- Exist. door to remain
- New door

FLOOR FINISH KEY

- 1 — New topping slab, see Struct. dwgs.

KEY PLAN AREA

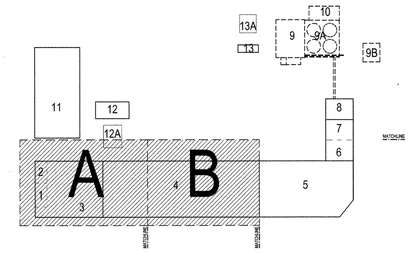

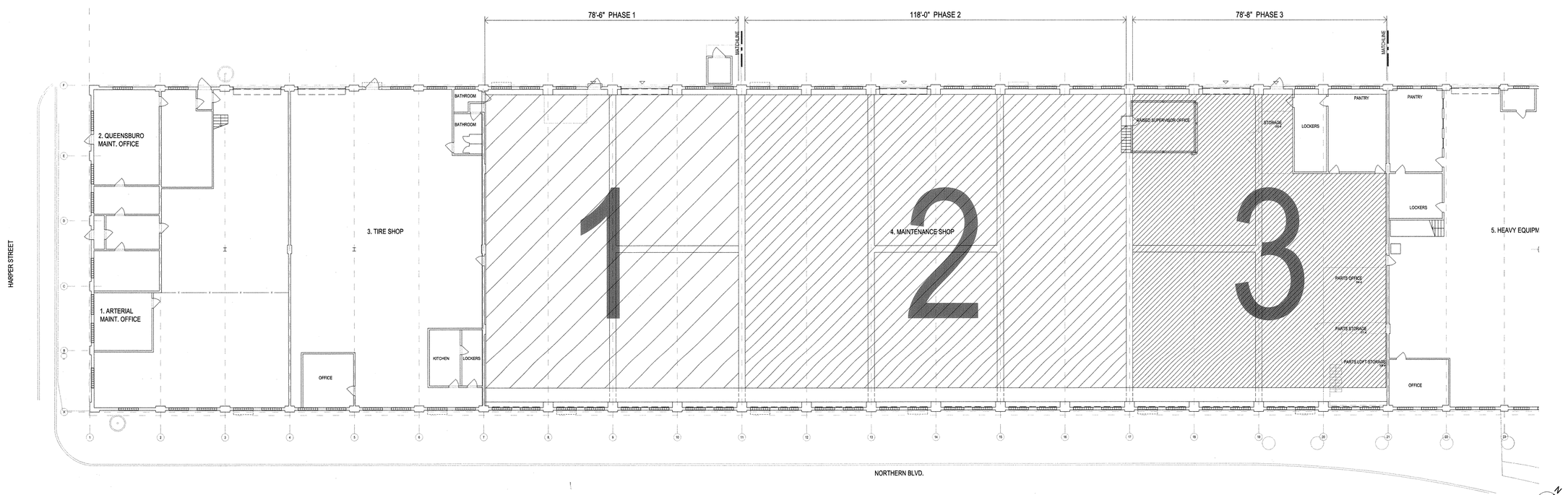

1 CONCRETE PHASING PARTIAL PLAN "A & B"
1/16" = 1'-0

NEW YORK CITY DEPARTMENT OF DESIGN + CONSTRUCTION
DIVISION OF STRUCTURES
BUREAU OF ARCHITECTURE & ENGINEERING

PROJECT NAME:
HARPER ST. YARD

32-11 HARPER STREET,
QUEENS, NY 11368
CAPITAL PROJECT NUMBER
HWQF027C

Architect:
nARCHITECTS, PLLC
68 JAY #317
BROOKLYN, NY 11201
T: 718.260.0845 F: 718.260.0847

MEP Engineer:
PLUS GROUP
231 WEST 29th STREET, RM. 706
NEW YORK, NY 10001
T: 212.233.2700 F: 212.233.2727

Structural Engineer:
ROBERT SILMAN ASSOCIATES
88 UNIVERSITY PLACE
NEW YORK, NY 10003
T: 212.620.7970 F: 212.620.8157

Environmental & Fuel Consultant:
URS
77 GOODELL STREET
BUFFALO, NY 14203
T: 716.856.5636 F: 716.856.2545

Code Consultant:
J CALLAHAN CONSULTING INC.
299 BROADWAY SUITE 1420
NEW YORK, NY 10007
T: 212.766.2115 F: 212.766.2787

Date:	Issue:
05.19.10	75% SD
06.02.10	80% SD
11.17.10	100% Schematic Design
02.09.11	100% Design Dev.
04.06.11	75% CD
03.07.12	100% CD
06.06.12	100% CD - Revised
10.12.12	**Bid Set**

Sheet title:
CONCRETE PHASING PARTIAL PLAN "A & B"

Scale: 1/16" = 1'-0"

Seal and Signature:
REGISTERED ARCHITECT Mimi HaTram Chu Hoang 030935 STATE OF NEW YORK

Date: 09.28.12
Project No.: 0902
Dwg By: MP
Chk By: MH

Dwg No:
A-001

DEMO. NOTES

1. ALL DEMOLITION WORK SHALL BE COORDINATED WITH OTHER CONTRACTORS AND PERSONNEL WORKING ON-SITE.
2. THE DEMOLITION CONTRACTOR MAY SALVAGE ANY MATERIALS DESIGNATED FOR DEMOLITION AND OFF-SITE DIPOSAL. CONTRACTOR IS NOT PERMITTED TO REPROCESS CONSTRUCTION AND DEMOLITION DEBRIS ON SITE FOR RESALE OR REUSE.
3. THE CONTRACTOR SHALL VERIFY EXISTING CONDITIONS PRIOR TO DEMOLITION.
4. DURING DEMOLITION, THE CONTRACTOR SHALL PROTECT AND MAINTAIN ALL EXISTING FEATURES, UTILITIES, AND ANY EXISTING ON-SITE APPURTENANCES. THE CONTRACTOR SHALL REPAIR ANY DAMAGE CAUSED BY THE CONTRACTOR TO A CONDITION EQUAL OR BETTER THAN THAT WHICH EXISTED PRIOR TO THE COMMENCEMENT OF WORK AT NO ADDITIONAL COST TO THE CITY OF NEW YORK.
5. THE CONTRACTOR SHALL MINIMIZE DISRUPTIONS TO THE FACILITY'S OPERATIONS.
6. THE CONTRACTOR SHALL RELOCATE, AS NECESSARY TO PERFORM WORK, ALL UTILITIES PRIOR TO THE COMMENCEMENT OF WORK.
7. EXISTING STRUCTURAL ELEMENTS ARE SHOWN FOR GENERAL INFORMATION ONLY, AND ARE BASED ON LIMITED FIELD MEASUREMENTES AND OBSERVATION AT THE SITE. ALL DISCREPANCIES BETWEEN ACTUAL CONDITIONS AND THOSE SHOWN IN THE ONTRACT DOCUMENTS SHALL BE REPORTED TO THE ENGINEER OF RECORD FOR HIS EVALUATION BEFORE THE AFFECTED CONSTRUCTION IS PUT IN PLACE.
8. ALL DEMOLITION WORK SHALL BE COORDINATED WITH STRUCTURAL, MECHANICAL, ELECTRICAL AND PLUMBING DRAWINGS AND SHALL CONFORM TO THE PROJECT SPECIFICATIONS, INCLUDING THE CITY OF NEW YORK BUILDING CODE, 2008 EDITION.

DEMO. PLAN DRAWING KEY

- Elements to be demolished
- Elements to be remove & relocated
- Exist. door to remain
- Demo. Roof
- Exist. drain to be demolished
- Exist. roof vent to be demolished
- Exist. roof vent

KEY PLAN AREA

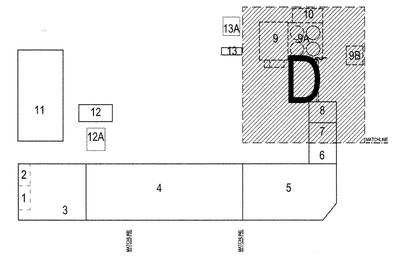

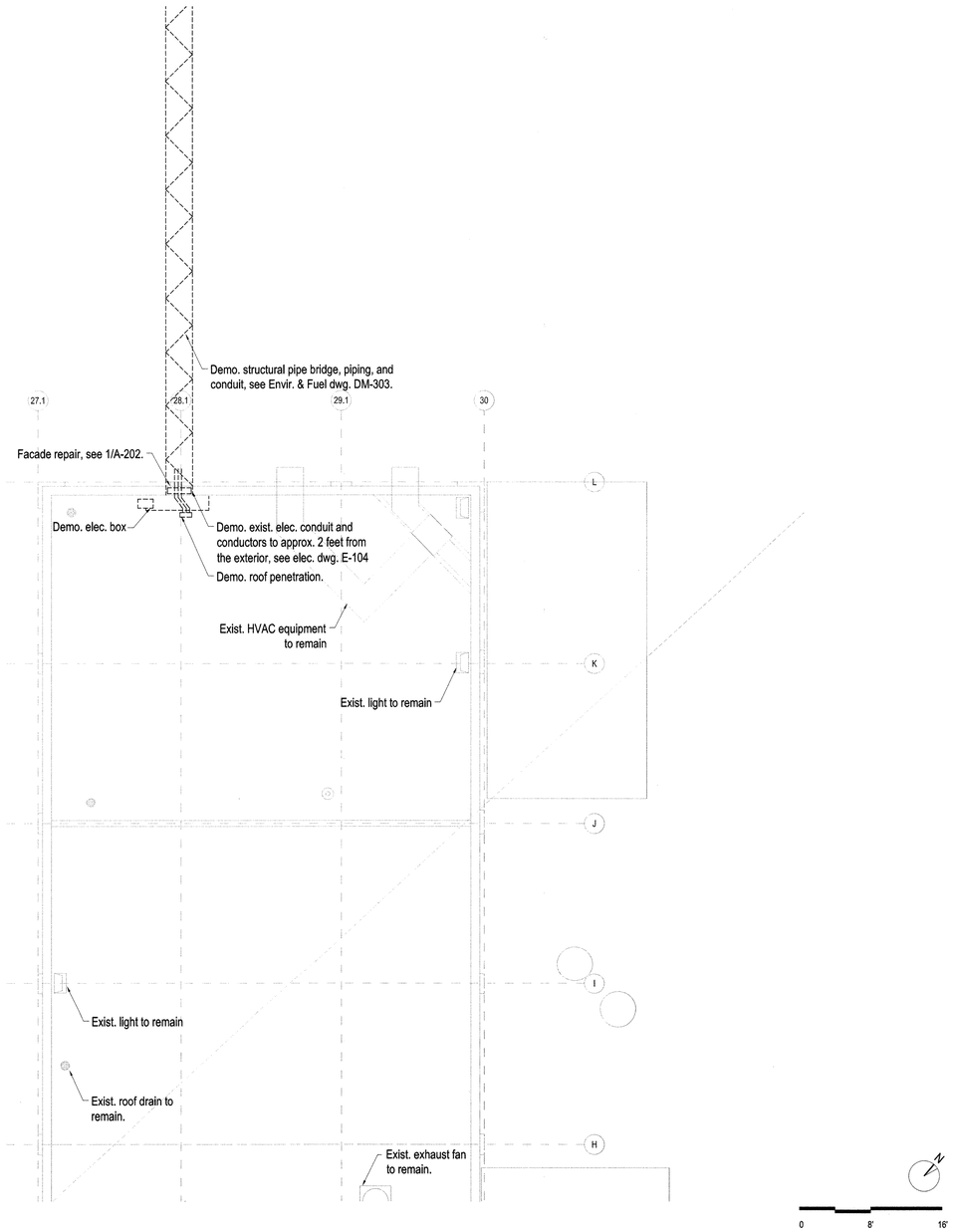

NEW YORK CITY DEPARTMENT OF DESIGN + CONSTRUCTION
DIVISION OF STRUCTURES
BUREAU OF ARCHITECTURE & ENGINEERING

PROJECT NAME:
HARPER ST. YARD

32-11 HARPER STREET,
QUEENS, NY 11368
CAPITAL PROJECT NUMBER
HWQF027C

Architect:
nARCHITECTS, PLLC
68 JAY #317
BROOKLYN, NY 11201
T: 718.260.0845 F: 718.260.0847

MEP Engineer:
PLUS GROUP
231 WEST 29th STREET, RM. 706
NEW YORK, NY 10001
T: 212.233.2700 F: 212.233.2727

Structural Engineer:
ROBERT SILMAN ASSOCIATES
88 UNIVERSITY PLACE
NEW YORK, NY 10003
T: 212.620.7970 F: 212.620.8157

Environmental & Fuel Consultant:
URS
77 GOODELL STREET
BUFFALO, NY 14203
T: 716.856.5636 F: 716.856.2545

Code Consultant:
J CALLAHAN CONSULTING INC.
299 BROADWAY SUITE 1420
NEW YORK, NY 10007
T: 212.766.2115 F: 212.766.2787

Date:	Issue:
05.19.10	75% SD
06.02.10	80% SD
11.17.10	100% Schematic Design
02.09.11	100% Design Dev.
04.06.11	75% CD
03.07.12	100% CD
06.06.12	100% CD - Revised
10.12.12	**Bid Set**

Sheet title:
DEMOLITION ROOF PARTIAL PLAN "D"

Scale: 1/8" = 1'-0"

Seal and Signature:
REGISTERED ARCHITECT
Minh HaTram Chu Hoang
030935
STATE OF NEW YORK

Date: 09.28.12
Project No.: 0902
Dwg By: MP
Chk By: MH

Dwg No:
DM-123.00

DEMO. NOTES

1. ALL DEMOLITION WORK SHALL BE COORDINATED WITH OTHER CONTRACTORS AND PERSONNEL WORKING ON-SITE.
2. THE DEMOLITION CONTRACTOR MAY SALVAGE ANY MATERIALS DESIGNATED FOR DEMOLITION AND OFF-SITE DIPOSAL. CONTRACTOR IS NOT PERMITTED TO REPROCESS CONSTRUCTION AND DEMOLITION DEBRIS ON SITE FOR RESALE OR REUSE.
3. THE CONTRACTOR SHALL VERIFY EXISTING CONDITIONS PRIOR TO DEMOLITION.
4. DURING DEMOLITION, THE CONTRACTOR SHALL PROTECT AND MAINTAIN ALL EXISTING FEATURES, UTILITIES, AND ANY EXISTING ON-SITE APPURTENANCES. THE CONTRACTOR SHALL REPAIR ANY DAMAGE CAUSED BY THE CONTRACTOR TO A CONDITION EQUAL OR BETTER THAN THAT WHICH EXISTED PRIOR TO THE COMMENCEMENT OF WORK AT NO ADDITIONAL COST TO THE CITY OF NEW YORK.
5. THE CONTRACTOR SHALL MINIMIZE DISRUPTIONS TO THE FACILITY'S OPERATIONS.
6. THE CONTRACTOR SHALL RELOCATE, AS NECESSARY TO PERFORM WORK, ALL UTILITIES PRIOR TO THE COMMENCEMENT OF WORK.
7. EXISTING STRUCTURAL ELEMENTS ARE SHOWN FOR GENERAL INFORMATION ONLY, AND ARE BASED ON LIMITED FIELD MEASUREMENTES AND OBSERVATION AT THE SITE. ALL DISCREPANCIES BETWEEN ACTUAL CONDITIONS AND THOSE SHOWN IN THE ONTRACT DOCUMENTS SHALL BE REPORTED TO THE ENGINEER OF RECORD FOR HIS EVALUATION BEFORE THE AFFECTED CONSTRUCTION IS PUT IN PLACE.
8. ALL DEMOLITION WORK SHALL BE COORDINATED WITH STRUCTURAL, MECHANICAL, ELECTRICAL AND PLUMBING DRAWINGS AND SHALL CONFORM TO THE PROJECT SPECIFICATIONS, INCLUDING THE CITY OF NEW YORK BUILDING CODE, 2008 EDITION.

DEMO. PLAN DRAWING KEY

- Elements to be demolished
- Elements to be remove & relocated
- Exist. door to remain
- Demo. Roof
- Exist. drain to be demolished
- Exist. roof vent to be demolished
- Exist. roof vent

KEY PLAN AREA

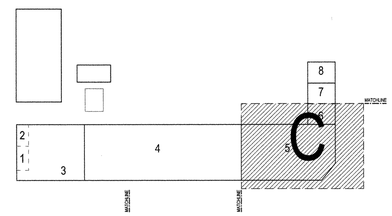

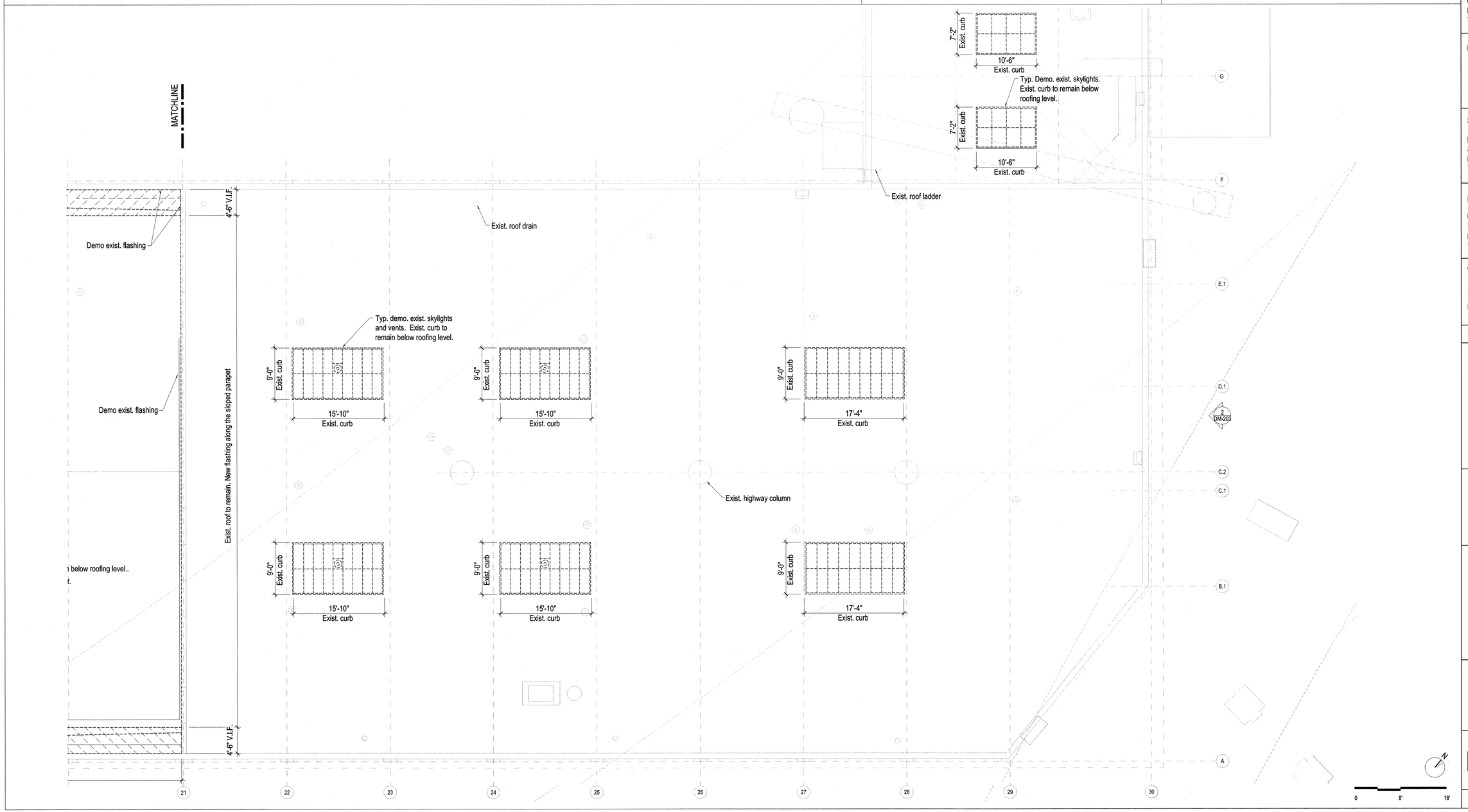

NEW YORK CITY DEPARTMENT OF DESIGN + CONSTRUCTION
DIVISION OF STRUCTURES
BUREAU OF ARCHITECTURE & ENGINEERING

PROJECT NAME:
HARPER ST. YARD

MAINTENANCE BUILDING

32-11 HARPER STREET,
QUEENS, NY 11368

Architect:
nARCHITECTS, PLLC
68 JAY #317
BROOKLYN, NY 11201
T: 718.260.0845 F: 718.260.0847

MEP Engineer:
PLUS GROUP
231 WEST 29th STREET, RM. 706
NEW YORK, NY 10001
T: 212.233.2700 F: 212.233.2727

Structural Engineer:
ROBERT SILMAN ASSOCIATES
88 UNIVERSITY PLACE
NEW YORK, NY 10003
T: 212.620.7970 F: 212.620.8157

Environmental & Fuel Consultant:
URS
77 GOODELL STREET
BUFFALO, NY 14203
T: 716.856.5636 F: 716.856.2545

Code Consultant:
J CALLAHAN CONSULTING INC.
299 BROADWAY SUITE 1420
NEW YORK, NY 10007
T: 212.766.2115 F: 212.766.2787

Date: Issue:

12.01.11 Permit Set

Sheet title:
DEMOLITION ROOF PARTIAL PLAN "C"
Scale: 1/8" = 1'-0"

Seal and Signature:
REGISTERED ARCHITECT Mimi HaTram Chu Hoang 030935 STATE OF NEW YORK

Date:
Project No.: 0902
Dwg By: MP
Chk By: MH

Dwg No:
DM-122.00

Pg No: 8 of 45

DEMO. NOTES

1. ALL DEMOLITION WORK SHALL BE COORDINATED WITH OTHER CONTRACTORS AND PERSONNEL WORKING ON-SITE.
2. THE DEMOLITION CONTRACTOR MAY SALVAGE ANY MATERIALS DESIGNATED FOR DEMOLITION AND OFF-SITE DIPOSAL. CONTRACTOR IS NOT PERMITTED TO REPROCESS CONSTRUCTION AND DEMOLITION DEBRIS ON SITE FOR RESALE OR REUSE.
3. THE CONTRACTOR SHALL VERIFY EXISTING CONDITIONS PRIOR TO DEMOLITION.
4. DURING DEMOLITION, THE CONTRACTOR SHALL PROTECT AND MAINTAIN ALL EXISTING FEATURES, UTILITIES, AND ANY EXISTING ON-SITE APPURTENANCES. THE CONTRACTOR SHALL REPAIR ANY DAMAGE CAUSED BY THE CONTRACTOR TO A CONDITION EQUAL OR BETTER THAN THAT WHICH EXISTED PRIOR TO THE COMMENCEMENT OF WORK AT NO ADDITIONAL COST TO THE CITY OF NEW YORK.
5. THE CONTRACTOR SHALL MINIMIZE DISRUPTIONS TO THE FACILITY'S OPERATIONS.
6. THE CONTRACTOR SHALL RELOCATE, AS NECESSARY TO PERFORM WORK, ALL UTILITIES PRIOR TO THE COMMENCEMENT OF WORK.
7. EXISTING STRUCTURAL ELEMENTS ARE SHOWN FOR GENERAL INFORMATION ONLY, AND ARE BASED ON LIMITED FIELD MEASUREMENTES AND OBSERVATION AT THE SITE. ALL DISCREPANCIES BETWEEN ACTUAL CONDITIONS AND THOSE SHOWN IN THE ONTRACT DOCUMENTS SHALL BE REPORTED TO THE ENGINEER OF RECORD FOR HIS EVALUATION BEFORE THE AFFECTED CONSTRUCTION IS PUT IN PLACE.
8. ALL DEMOLITION WORK SHALL BE COORDINATED WITH STRUCTURAL, MECHANICAL, ELECTRICAL AND PLUMBING DRAWINGS AND SHALL CONFORM TO THE PROJECT SPECIFICATIONS, INCLUDING THE CITY OF NEW YORK BUILDING CODE, 2008 EDITION.

DEMO. PLAN DRAWING KEY

- Elements to be demolished
- Elements to be remove & relocated
- Exist. door to remain
- Demo. Roof
- Exist. drain to be demolished
- Exist. roof vent to be demolished
- Exist. roof vent

KEY PLAN AREA

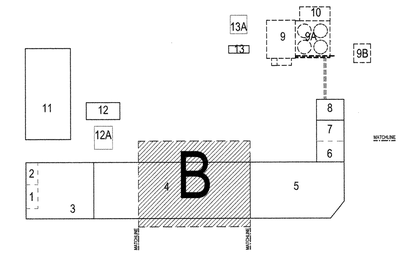

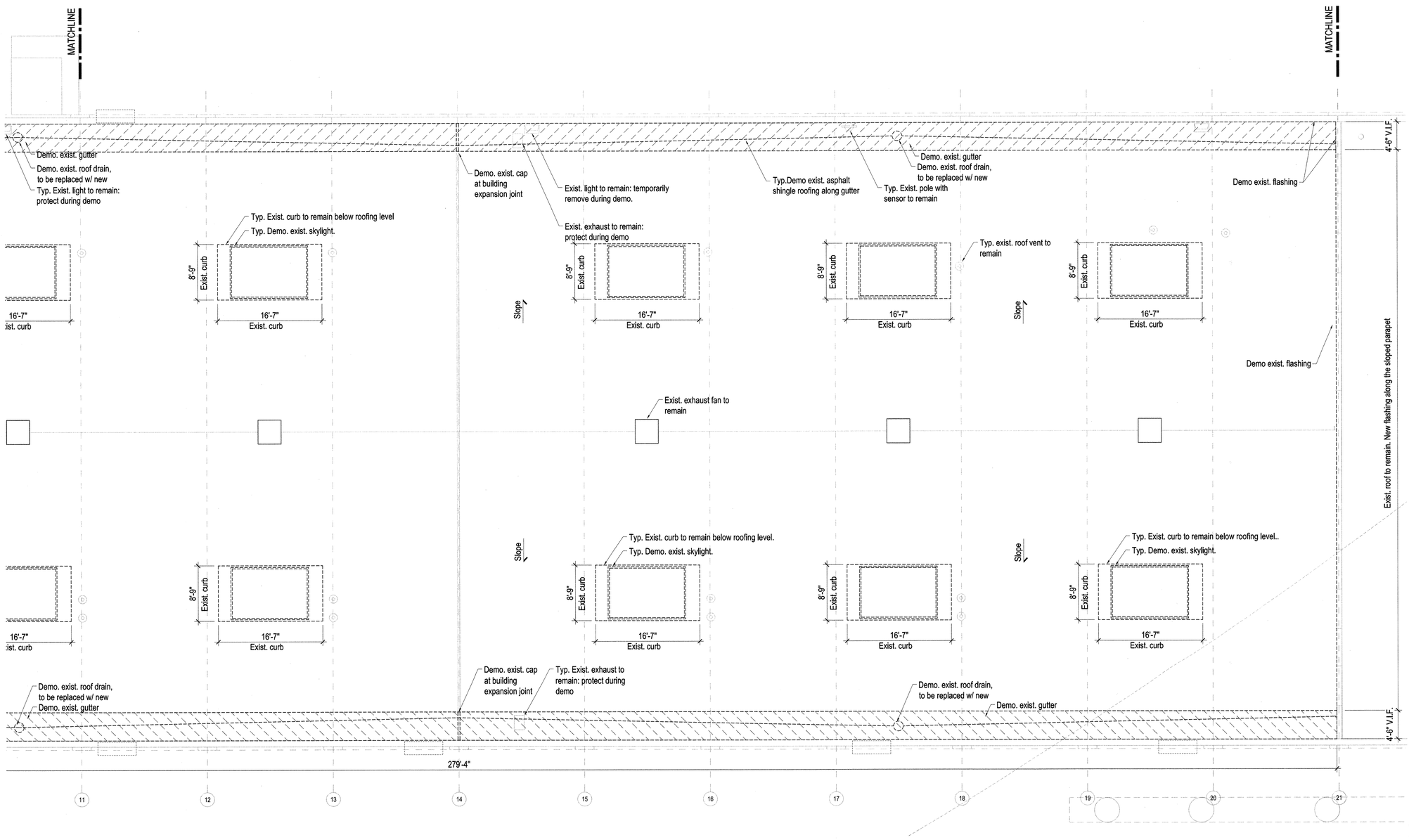

NEW YORK CITY DEPARTMENT OF DESIGN + CONSTRUCTION
DIVISION OF STRUCTURES
BUREAU OF ARCHITECTURE & ENGINEERING

PROJECT NAME:
HARPER ST. YARD

32-11 HARPER STREET,
QUEENS, NY 11368
CAPITAL PROJECT NUMBER
HWQF027C

Architect:
nARCHITECTS, PLLC
68 JAY #317
BROOKLYN, NY 11201
T: 718.260.0845 F: 718.260.0847

MEP Engineer:
PLUS GROUP
231 WEST 29th STREET, RM. 706
NEW YORK, NY 10001
T: 212.233.2700 F: 212.233.2727

Structural Engineer:
ROBERT SILMAN ASSOCIATES
88 UNIVERSITY PLACE
NEW YORK, NY 10003
T: 212.620.7970 F: 212.620.8157

Environmental & Fuel Consultant:
URS
77 GOODELL STREET
BUFFALO, NY 14203
T: 716.856.5636 F: 716.856.2545

Code Consultant:
J CALLAHAN CONSULTING INC.
299 BROADWAY SUITE 1420
NEW YORK, NY 10007
T: 212.766.2115 F: 212.766.2787

Date:	Issue:
05.19.10	75% SD
06.02.10	80% SD
11.17.10	100% Schematic Design
02.09.11	100% Design Dev.
04.06.11	75% CD
03.07.12	100% CD
06.06.12	100% CD - Revised
10.12.12	**Bid Set**

Sheet title:
DEMOLITION ROOF PARTIAL PLAN "B"
Scale: 1/8" = 1'-0"

Seal and Signature:
REGISTERED ARCHITECT Mimi HaTram Chu Huang 030935 STATE OF NEW YORK

Date: 09.28.12
Project No.: 0902
Dwg By: MP
Chk By: MH

Dwg No:
DM-121.00

DEMO. NOTES

1. ALL DEMOLITION WORK SHALL BE COORDINATED WITH OTHER CONTRACTORS AND PERSONNEL WORKING ON-SITE.
2. THE DEMOLITION CONTRACTOR MAY SALVAGE ANY MATERIALS DESIGNATED FOR DEMOLITION AND OFF-SITE DIPOSAL. CONTRACTOR IS NOT PERMITTED TO REPROCESS CONSTRUCTION AND DEMOLITION DEBRIS ON SITE FOR RESALE OR REUSE.
3. THE CONTRACTOR SHALL VERIFY EXISTING CONDITIONS PRIOR TO DEMOLITION.
4. DURING DEMOLITION, THE CONTRACTOR SHALL PROTECT AND MAINTAIN ALL EXISTING FEATURES, UTILITIES, AND ANY EXISTING ON-SITE APPURTENANCES. THE CONTRACTOR SHALL REPAIR ANY DAMAGE CAUSED BY THE CONTRACTOR TO A CONDITION EQUAL OR BETTER THAN THAT WHICH EXISTED PRIOR TO THE COMMENCEMENT OF WORK AT NO ADDITIONAL COST TO THE CITY OF NEW YORK.
5. THE CONTRACTOR SHALL MINIMIZE DISRUPTIONS TO THE FACILITY'S OPERATIONS.
6. THE CONTRACTOR SHALL RELOCATE, AS NECESSARY TO PERFORM WORK, ALL UTILITIES PRIOR TO THE COMMENCEMENT OF WORK.
7. EXISTING STRUCTURAL ELEMENTS ARE SHOWN FOR GENERAL INFORMATION ONLY, AND ARE BASED ON LIMITED FIELD MEASUREMENTES AND OBSERVATION AT THE SITE. ALL DISCREPANCIES BETWEEN ACTUAL CONDITIONS AND THOSE SHOWN IN THE ONTRACT DOCUMENTS SHALL BE REPORTED TO THE ENGINEER OF RECORD FOR HIS EVALUATION BEFORE THE AFFECTED CONSTRUCTION IS PUT IN PLACE.
8. ALL DEMOLITION WORK SHALL BE COORDINATED WITH STRUCTURAL, MECHANICAL, ELECTRICAL AND PLUMBING DRAWINGS AND SHALL CONFORM TO THE PROJECT SPECIFICATIONS, INCLUDING THE CITY OF NEW YORK BUILDING CODE, 2008 EDITION.

DEMO. PLAN DRAWING KEY

- Elements to be demolished
- Elements to be remove & relocated
- Exist. door to remain
- Demo. Roof
- Exist. drain to be demolished
- Exist. roof vent to be demolished
- Exist. roof vent

KEY PLAN AREA

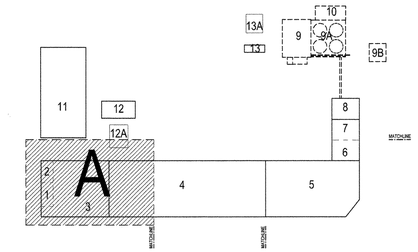

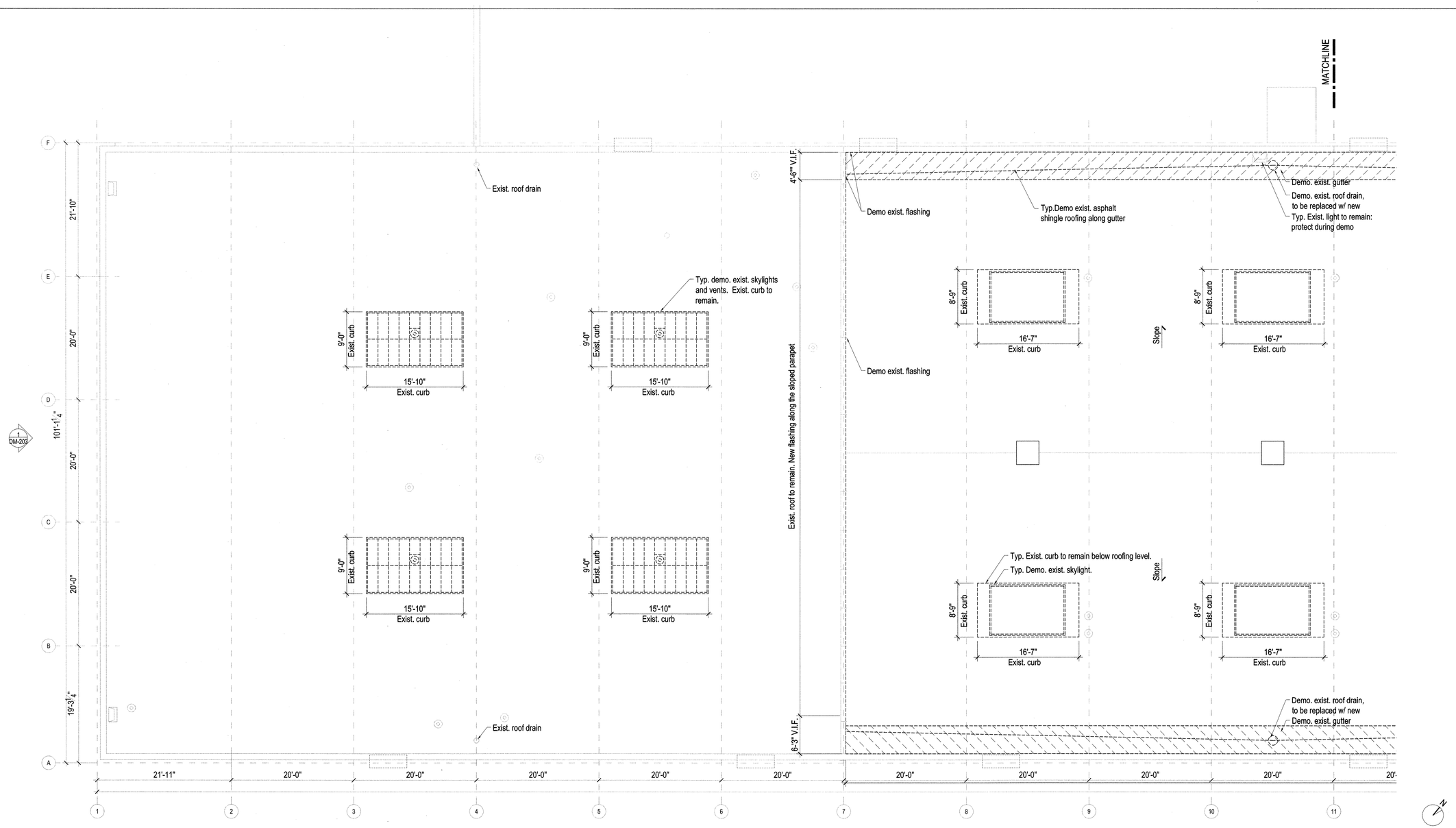

NEW YORK CITY DEPARTMENT OF DESIGN + CONSTRUCTION
DIVISION OF STRUCTURES
BUREAU OF ARCHITECTURE & ENGINEERING

PROJECT NAME:
HARPER ST. YARD

32-11 HARPER STREET,
QUEENS, NY 11368
CAPITAL PROJECT NUMBER
HWQF027C

Architect:
nARCHITECTS, PLLC
68 JAY #317
BROOKLYN, NY 11201
T: 718.260.0845 F: 718.260.0847

MEP Engineer:
PLUS GROUP
231 WEST 29th STREET, RM. 706
NEW YORK, NY 10001
T: 212.233.2700 F: 212.233.2727

Structural Engineer:
ROBERT SILMAN ASSOCIATES
88 UNIVERSITY PLACE
NEW YORK, NY 10003
T: 212.620.7970 F: 212.620.8157

Environmental & Fuel Consultant:
URS
77 GOODELL STREET
BUFFALO, NY 14203
T: 716.856.5636 F: 716.856.2545

Code Consultant:
J CALLAHAN CONSULTING INC.
299 BROADWAY SUITE 1420
NEW YORK, NY 10007
T: 212.766.2115 F: 212.766.2787

Date:	Issue:
05.19.10	75% SD
06.02.10	80% SD
11.17.10	100% Schematic Design
02.09.11	100% Design Dev.
04.06.11	75% CD
03.07.12	100% CD
06.06.12	100% CD - Revised
10.12.12	**Bid Set**

Sheet title:
DEMOLITION ROOF PARTIAL PLAN "A"

Scale: 1/8" = 1'-0"

Seal and Signature:
REGISTERED ARCHITECT Milin Ha Tram Chu Hoang 030935 STATE OF NEW YORK

Date: 09.28.12
Project No.: 0902
Dwg By: MP
Chk By: MH

Dwg No:
DM-120.00

DEMO. NOTES

1. ALL DEMOLITION WORK SHALL BE COORDINATED WITH OTHER CONTRACTORS AND PERSONNEL WORKING ON-SITE.
2. THE DEMOLITION CONTRACTOR MAY SALVAGE ANY MATERIALS DESIGNATED FOR DEMOLITION AND OFF-SITE DIPOSAL. CONTRACTOR IS NOT PERMITTED TO REPROCESS CONSTRUCTION AND DEMOLITION DEBRIS ON SITE FOR RESALE OR REUSE.
3. THE CONTRACTOR SHALL VERIFY EXISTING CONDITIONS PRIOR TO DEMOLITION.
4. DURING DEMOLITION, THE CONTRACTOR SHALL PROTECT AND MAINTAIN ALL EXISTING FEATURES, UTILITIES, AND ANY EXISTING ON-SITE APPURTENANCES. THE CONTRACTOR SHALL REPAIR ANY DAMAGE CAUSED BY THE CONTRACTOR TO A CONDITION EQUAL OR BETTER THAN THAT WHICH EXISTED PRIOR TO THE COMMENCEMENT OF WORK AT NO ADDITIONAL COST TO THE CITY OF NEW YORK.
5. THE CONTRACTOR SHALL MINIMIZE DISRUPTIONS TO THE FACILITY'S OPERATIONS.
6. THE CONTRACTOR SHALL RELOCATE, AS NECESSARY TO PERFORM WORK, ALL UTILITIES PRIOR TO THE COMMENCEMENT OF WORK.
7. EXISTING STRUCTURAL ELEMENTS ARE SHOWN FOR GENERAL INFORMATION ONLY, AND ARE BASED ON LIMITED FIELD MEASUREMENTES AND OBSERVATION AT THE SITE. ALL DISCREPANCIES BETWEEN ACTUAL CONDITIONS AND THOSE SHOWN IN THE ONTRACT DOCUMENTS SHALL BE REPORTED TO THE ENGINEER OF RECORD FOR HIS EVALUATION BEFORE THE AFFECTED CONSTRUCTION IS PUT IN PLACE.
8. ALL DEMOLITION WORK SHALL BE COORDINATED WITH STRUCTURAL, MECHANICAL, ELECTRICAL AND PLUMBING DRAWINGS AND SHALL CONFORM TO THE PROJECT SPECIFICATIONS, INCLUDING THE CITY OF NEW YORK BUILDING CODE, 2008 EDITION.

DEMO. PLAN DRAWING KEY

- Elements to be demolished
- Elements to be remove & relocated
- Exist. door to remain
- Demo. Roof
- Exist. drain to be demolished
- Exist. roof vent to be demolished
- Exist. roof vent

KEY PLAN AREA

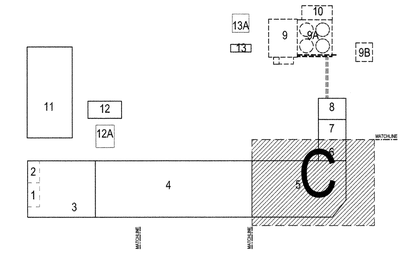

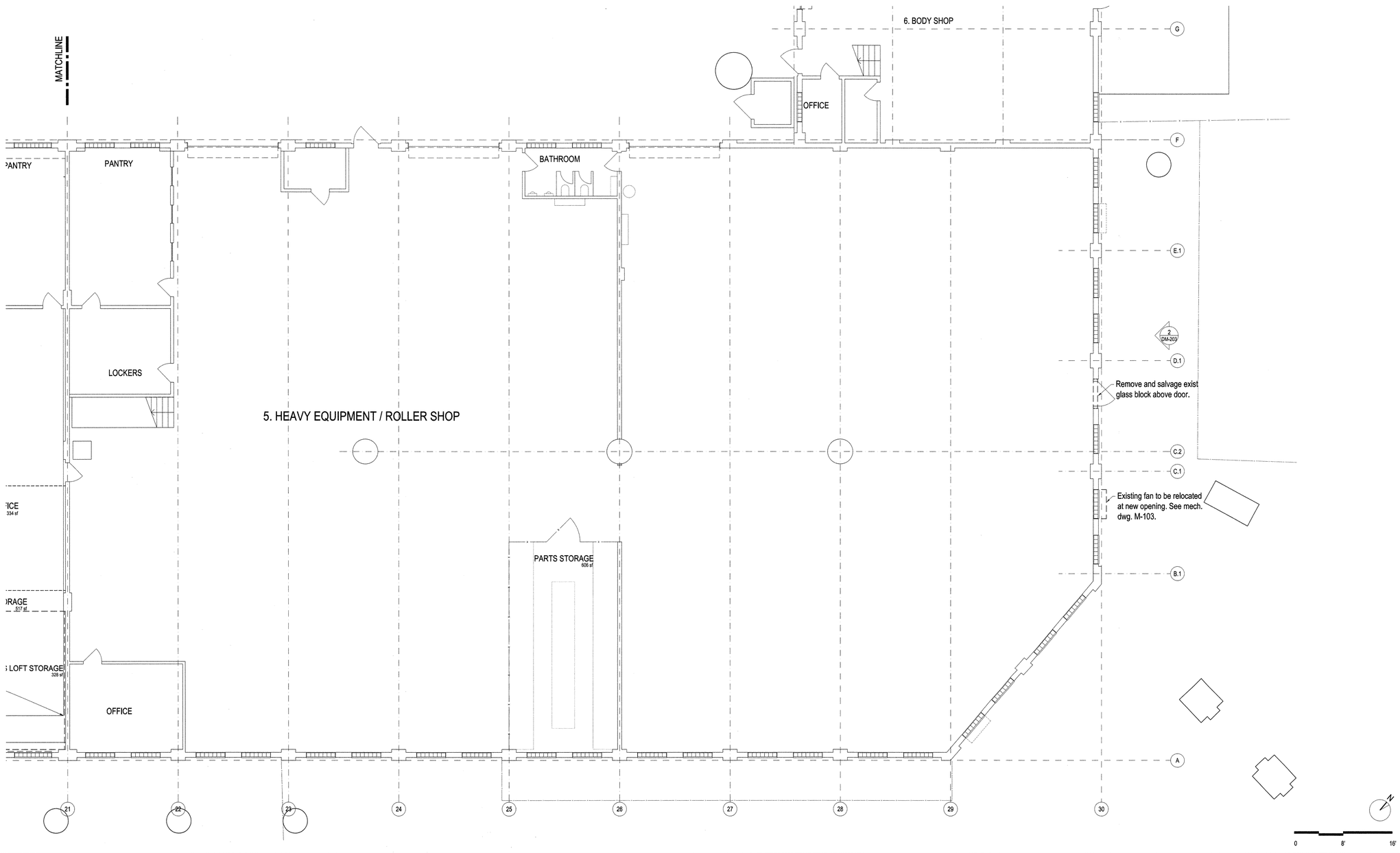

NEW YORK CITY DEPARTMENT OF DESIGN + CONSTRUCTION
DIVISION OF STRUCTURES
BUREAU OF ARCHITECTURE & ENGINEERING

PROJECT NAME:
HARPER ST. YARD

32-11 HARPER STREET,
QUEENS, NY 11368
CAPITAL PROJECT NUMBER
HWQF027C

Architect:
nARCHITECTS, PLLC
68 JAY #317
BROOKLYN, NY 11201
T: 718.260.0845 F: 718.260.0847

MEP Engineer:
PLUS GROUP
231 WEST 29th STREET, RM. 706
NEW YORK, NY 10001
T: 212.233.2700 F: 212.233.2727

Structural Engineer:
ROBERT SILMAN ASSOCIATES
88 UNIVERSITY PLACE
NEW YORK, NY 10003
T: 212.620.7970 F: 212.620.8157

Environmental & Fuel Consultant:
URS
77 GOODELL STREET
BUFFALO, NY 14203
T: 716.856.5636 F: 716.856.2545

Code Consultant:
J CALLAHAN CONSULTING INC.
299 BROADWAY SUITE 1420
NEW YORK, NY 10007
T: 212.766.2115 F: 212.766.2787

Date:	Issue:
05.19.10	75% SD
06.02.10	80% SD
11.17.10	100% Schematic Design
02.09.11	100% Design Dev.
04.06.11	75% CD
03.07.12	100% CD
06.06.12	100% CD - Revised
10.12.12	**Bid Set**

Sheet title:
DEMO. FIRST FLOOR PARTIAL PLAN "C"

Scale: 1/8" = 1'-0"

Seal and Signature:

REGISTERED ARCHITECT
Mimi HaTram Chu Hoang
030935
STATE OF NEW YORK

Date: 09.28.12
Project No.: 0902
Dwg By: MP
Chk By: MH

Dwg No:
DM-102.00

DEMO. NOTES

1. ALL DEMOLITION WORK SHALL BE COORDINATED WITH OTHER CONTRACTORS AND PERSONNEL WORKING ON-SITE.
2. THE DEMOLITION CONTRACTOR MAY SALVAGE ANY MATERIALS DESIGNATED FOR DEMOLITION AND OFF-SITE DIPOSAL. CONTRACTOR IS NOT PERMITTED TO REPROCESS CONSTRUCTION AND DEMOLITION DEBRIS ON SITE FOR RESALE OR REUSE.
3. THE CONTRACTOR SHALL VERIFY EXISTING CONDITIONS PRIOR TO DEMOLITION.
4. DURING DEMOLITION, THE CONTRACTOR SHALL PROTECT AND MAINTAIN ALL EXISTING FEATURES, UTILITIES, AND ANY EXISTING ON-SITE APPURTENANCES. THE CONTRACTOR SHALL REPAIR ANY DAMAGE CAUSED BY THE CONTRACTOR TO A CONDITION EQUAL OR BETTER THAN THAT WHICH EXISTED PRIOR TO THE COMMENCEMENT OF WORK AT NO ADDITIONAL COST TO THE CITY OF NEW YORK.
5. THE CONTRACTOR SHALL MINIMIZE DISRUPTIONS TO THE FACILITY'S OPERATIONS.
6. THE CONTRACTOR SHALL RELOCATE, AS NECESSARY TO PERFORM WORK, ALL UTILITIES PRIOR TO THE COMMENCEMENT OF WORK.
7. EXISTING STRUCTURAL ELEMENTS ARE SHOWN FOR GENERAL INFORMATION ONLY, AND ARE BASED ON LIMITED FIELD MEASUREMENTES AND OBSERVATION AT THE SITE. ALL DISCREPANCIES BETWEEN ACTUAL CONDITIONS AND THOSE SHOWN IN THE ONTRACT DOCUMENTS SHALL BE REPORTED TO THE ENGINEER OF RECORD FOR HIS EVALUATION BEFORE THE AFFECTED CONSTRUCTION IS PUT IN PLACE.
8. ALL DEMOLITION WORK SHALL BE COORDINATED WITH STRUCTURAL, MECHANICAL, ELECTRICAL AND PLUMBING DRAWINGS AND SHALL CONFORM TO THE PROJECT SPECIFICATIONS, INCLUDING THE CITY OF NEW YORK BUILDING CODE, 2008 EDITION.

DEMO. PLAN DRAWING KEY

- Elements to be demolished
- Elements to be remove & relocated
- Exist. door to remain
- Demo. Roof
- Exist. drain to be demolished
- Exist. roof vent to be demolished
- Exist. roof vent

KEY PLAN AREA

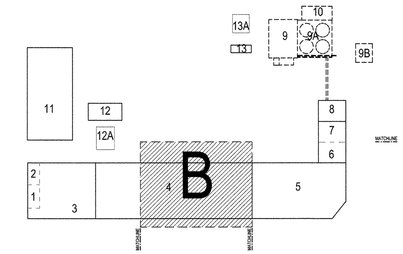

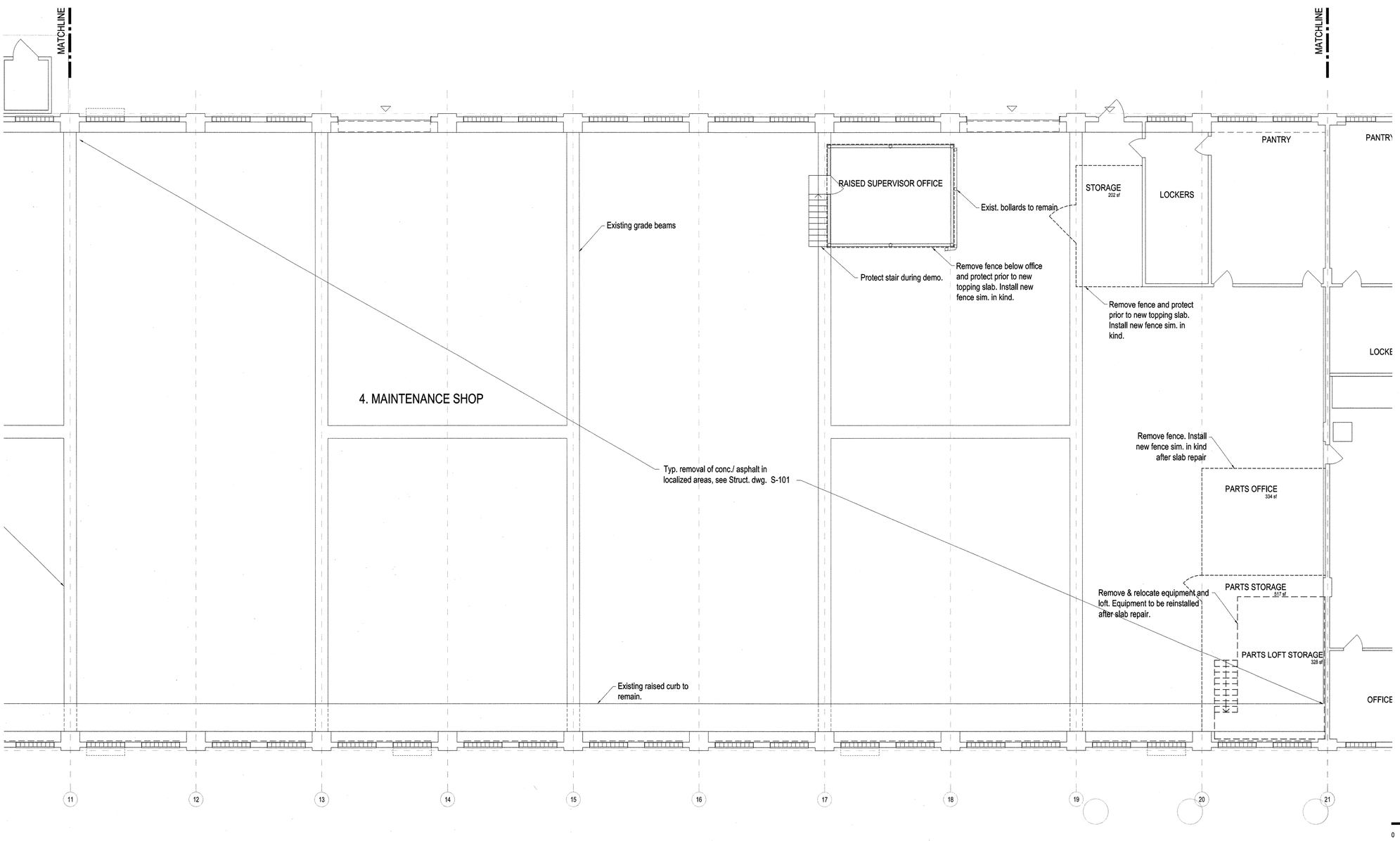

NEW YORK CITY DEPARTMENT OF DESIGN + CONSTRUCTION
DIVISION OF STRUCTURES
BUREAU OF ARCHITECTURE & ENGINEERING

PROJECT NAME:
HARPER ST. YARD

32-11 HARPER STREET,
QUEENS, NY 11368
CAPITAL PROJECT NUMBER
HWQF027C

Architect:
nARCHITECTS, PLLC
68 JAY #317
BROOKLYN, NY 11201
T: 718.260.0845 F: 718.260.0847

MEP Engineer:
PLUS GROUP
231 WEST 29th STREET, RM. 706
NEW YORK, NY 10001
T: 212.233.2700 F: 212.233.2727

Structural Engineer:
ROBERT SILMAN ASSOCIATES
88 UNIVERSITY PLACE
NEW YORK, NY 10003
T: 212.620.7970 F: 212.620.8157

Environmental & Fuel Consultant:
URS
77 GOODELL STREET
BUFFALO, NY 14203
T: 716.856.5636 F: 716.856.2545

Code Consultant:
J CALLAHAN CONSULTING INC.
299 BROADWAY SUITE 1420
NEW YORK, NY 10007
T: 212.766.2115 F: 212.766.2787

Date:	Issue:
05.19.10	75% SD
06.02.10	80% SD
11.17.10	100% Schematic Design
02.09.11	100% Design Dev.
04.06.11	75% CD
03.07.12	100% CD
06.06.12	100% CD - Revised
10.12.12	**Bid Set**

Sheet title:
DEMO. FIRST FLOOR PARTIAL PLAN "B"
Scale: 1/8" = 1'-0"

Seal and Signature:
REGISTERED ARCHITECT
Mimi HaTram Chu Hoang
030935
STATE OF NEW YORK

Date: 09.28.12
Project No.: 0902
Dwg By: MP
Chk By: MH

Dwg No:
DM-101.00

DEMO. NOTES

1. ALL DEMOLITION WORK SHALL BE COORDINATED WITH OTHER CONTRACTORS AND PERSONNEL WORKING ON-SITE.
2. THE DEMOLITION CONTRACTOR MAY SALVAGE ANY MATERIALS DESIGNATED FOR DEMOLITION AND OFF-SITE DIPOSAL. CONTRACTOR IS NOT PERMITTED TO REPROCESS CONSTRUCTION AND DEMOLITION DEBRIS ON SITE FOR RESALE OR REUSE.
3. THE CONTRACTOR SHALL VERIFY EXISTING CONDITIONS PRIOR TO DEMOLITION.
4. DURING DEMOLITION, THE CONTRACTOR SHALL PROTECT AND MAINTAIN ALL EXISTING FEATURES, UTILITIES, AND ANY EXISTING ON-SITE APPURTENANCES. THE CONTRACTOR SHALL REPAIR ANY DAMAGE CAUSED BY THE CONTRACTOR TO A CONDITION EQUAL OR BETTER THAN THAT WHICH EXISTED PRIOR TO THE COMMENCEMENT OF WORK AT NO ADDITIONAL COST TO THE CITY OF NEW YORK.
5. THE CONTRACTOR SHALL MINIMIZE DISRUPTIONS TO THE FACILITY'S OPERATIONS.
6. THE CONTRACTOR SHALL RELOCATE, AS NECESSARY TO PERFORM WORK, ALL UTILITIES PRIOR TO THE COMMENCEMENT OF WORK.
7. EXISTING STRUCTURAL ELEMENTS ARE SHOWN FOR GENERAL INFORMATION ONLY, AND ARE BASED ON LIMITED FIELD MEASUREMENTES AND OBSERVATION AT THE SITE. ALL DISCREPANCIES BETWEEN ACTUAL CONDITIONS AND THOSE SHOWN IN THE ONTRACT DOCUMENTS SHALL BE REPORTED TO THE ENGINEER OF RECORD FOR HIS EVALUATION BEFORE THE AFFECTED CONSTRUCTION IS PUT IN PLACE.
8. ALL DEMOLITION WORK SHALL BE COORDINATED WITH STRUCTURAL, MECHANICAL, ELECTRICAL AND PLUMBING DRAWINGS AND SHALL CONFORM TO THE PROJECT SPECIFICATIONS, INCLUDING THE CITY OF NEW YORK BUILDING CODE, 2008 EDITION.

DEMO. PLAN DRAWING KEY

- Elements to be demolished
- Elements to be remove & relocated
- Exist. door to remain
- Demo. Roof
- Exist. drain to be demolished
- Exist. roof vent to be demolished
- Exist. roof vent

KEY PLAN AREA

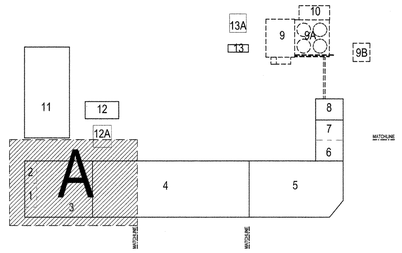

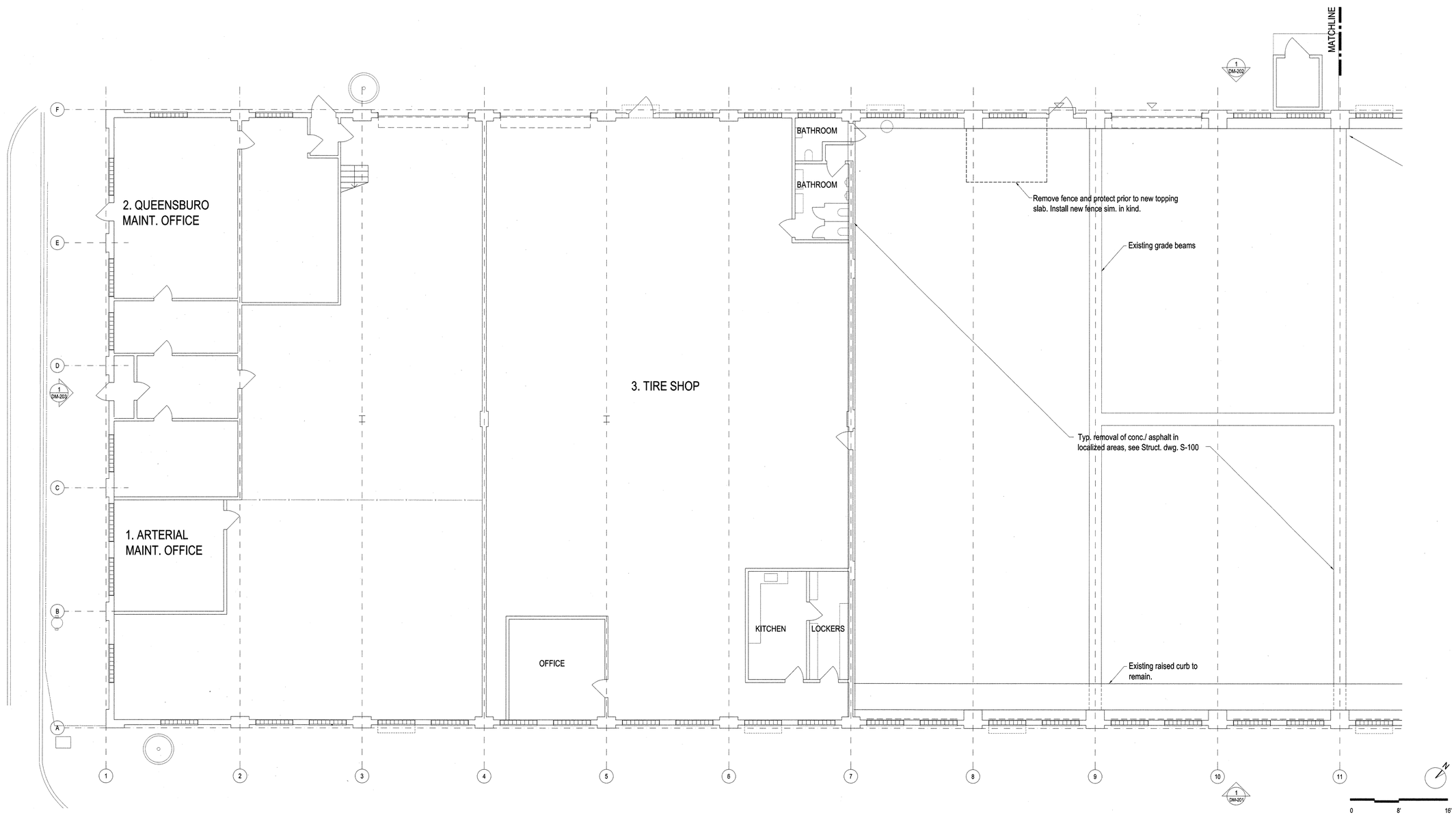

NEW YORK CITY DEPARTMENT OF DESIGN + CONSTRUCTION
DIVISION OF STRUCTURES
BUREAU OF ARCHITECTURE & ENGINEERING

PROJECT NAME:

HARPER ST. YARD

32-11 HARPER STREET,
QUEENS, NY 11368

CAPITAL PROJECT NUMBER

HWQF027C

Architect:

nARCHITECTS, PLLC
68 JAY #317
BROOKLYN, NY 11201
T: 718.260.0845 F: 718.260.0847

MEP Engineer:

PLUS GROUP
231 WEST 29th STREET, RM. 706
NEW YORK, NY 10001
T: 212.233.2700 F: 212.233.2727

Structural Engineer:

ROBERT SILMAN ASSOCIATES
88 UNIVERSITY PLACE
NEW YORK, NY 10003
T: 212.620.7970 F: 212.620.8157

Environmental & Fuel Consultant:

URS
77 GOODELL STREET
BUFFALO, NY 14203
T: 716.856.5636 F: 716.856.2545

Code Consultant:

J CALLAHAN CONSULTING INC.
299 BROADWAY SUITE 1420
NEW YORK, NY 10007
T: 212.766.2115 F: 212.766.2787

Date:	Issue:
05.19.10	75% SD
06.02.10	80% SD
11.17.10	100% Schematic Design
02.09.11	100% Design Dev.
04.06.11	75% CD
03.07.12	100% CD
06.06.12	100% CD - Revised
10.12.12	**Bid Set**

Sheet title:

DEMO. FIRST FLOOR PARTIAL PLAN "A"

Scale: 1/8" = 1'-0"

Seal and Signature:

REGISTERED ARCHITECT
Mimi HaTram Chu Hoang
030935
STATE OF NEW YORK

Date: 09.28.12

Project No.: 0902

Dwg By: MP

Chk By: MH

Dwg No:

DM-100.00

GENERAL ASBESTOS NOTES

1. THE CONTRACTOR SHALL PERFORM ASBESTOS AND HAZARDOUS MATERIALS ABATEMENT AT THE MAINTENANCE & REPAIR BUILDING PRIOR TO DEMOLITION WORK. THE CONTRACTOR IS RESPONSIBLE FOR IDENTIFYING, CHARACTERIZING AND REMEDIATING ASBESTOS CONTAINING MATERIALS CHARACTERIZED AND QUANTIFIED IN THE REPORT ENTITLED, "FINAL REPORT FOR ASBESTOS SURVEY SERVICES, HARPER STREET YARD, DEMOLITION OF BUILDING 9, 9A, AND 10 AND FLOOR LEVELING, EXHAUST SYSTEM AND ROOF UPGRADE BUILDINGS: 1, 2, 3, 4, AND 5, 32 HARPER STREET, QUEENS, NEW YORK 11231", PREPARED BY ATC ASSOCIATES, INC. DATED FEBRUARY 8, 2010 (INCLUDED AS APPENDIX A OF THE CONTRACT SPECIFICATIONS).
2. ASBESTOS CONTAINING MATERIALS (ACM) ARE KNOWN TO BE PRESENT AND HAS BEEN IDENTIFIED IN ROOF BASE FLASHING, BASE FLASHING TAR PAPER, AND BASE FLASHING VAPOR BARRIER, CORRUGATED TRANSITE BOARD AT PERIMETER OF INTERIOR CEILING.
3. ASBESTOS ABATEMENT CONTRACTOR SHALL PERFORM ALL WORK IN STRICT ACCORDANCE WITH ALL APPLICABLE LOCAL, STATE AND FEDERAL RULES, REGULATIONS, AND GUIDELINES, VARIANCES AND THE CONTRACT DOCUMENTS.
4. ALL MATERIAL MEASUREMENTS AND/OR QUANTITIES AND LOCATIONS ARE APPROXIMATE. ASBESTOS ABATEMENT CONTRACTOR IS RESPONSIBLE FOR FIELD VERIFICATION AT THE SITE. BUILDING OWNER IS NOT RESPONSIBLE FOR MATERIAL ESTIMATES.
5. ASBESTOS ABATEMENT CONTRACTOR IS RESPONSIBLE FOR KEEPING THE WORK AREA IN A CLEAN AND SAFE CONDITION AND SHALL ENSURE THAT UNCERTIFIED PERSONNEL OR UNAUTHORIZED VISITORS DO NOT ENTER ACTIVE WORK AREAS AT ANY TIME.
6. ASBESTOS ABATEMENT CONTRACTOR SHALL PROVIDE TEMPORARY PROTECTION TO KEEP THE WORK AREAS AND BUILDING IN A SECURE AND WATERTIGHT CONDITION AT ALL TIMES DURING THE PERFORMANCE OF THE CONTRACTOR'S WORK. THE CONTRACTOR SHALL BE RESPONSIBLE FOR ANY DAMAGE CAUSED AS A RESULT OF IMPROPER TEMPORARY PROTECTION.
7. ALL CONTRACTORS ARE RESPONSIBLE FOR MAKING THEMSELVES AND THEIR EMPLOYEES AWARE OF THE PRESENCE LOCATION, AND QUANTITY OF EXISTING ASBESTOS CONTAINING BUILDING MATERIALS AND TO WARN THEIR EMPLOYEES OF THE POTENTIAL DANGERS OF EXPOSURE TO ASBESTOS,
8. ANY DISTURBANCE OF ASBESTOS CONTAINING MATERIALS SHALL BE PERFORMED BY A LICENSED ASBESTOS ABATEMENT CONTRACTOR EMPLOYING CERTIFIED WORKERS.
9. ANY QUESTIONABLE MATERIAL OR MATERIAL SUSPECTED TO CONTAIN ASBESTOS WHICH IS NOT ALREADY IDENTIFIED TO BE ACM SHALL NOT BE DISTURBED AND SHALL BE BROUGHT TO THE ATTENTION OF THE OWNER FOR THE OWNER'S
10. THE PROVISIONS OF ANY SITE SPECIFIC VARIANCE OBTAINED BY THE CONTRACTOR MAY NOT BE IMPLEMENTED UNTIL AND UNLESS APPROVAL IS GIVEN BY THE OWNER OR THE OWNER'S REPRESENTATIVE.
11. CONTRACTOR SHALL BE RESPONSIBLE FOR REPLACING ANY EQUIPMENT, MATERIAL, PROPERTY, ETC. DAMAGED AS A RESULT OF THE CONTRACTOR'S WORK AT NO COST TO THE BUILDING OWNER.
12. THE ASBESTOS ABATEMENT CONTRACTOR SHALL COORDINATE WITH OWNER OR OWNER'S REPRESENTATIVE FOR LOCATION OF TEMPORARY FACILITIES. STAGING AREAS AND DUMPSTER PLACEMENT SHALL BE LIMITED TO LOCATIONS AS DESIGNATED BY OWNER OR OWNER'S REPRESENTATIVE. CONTRACTOR SHALL BE RESPONSIBLE FOR SECURING STAGING AND STORAGE AREAS.
13. CONTRACTOR SHALL BE RESPONSIBLE FOR COORDINATING THE WORK OF ALL TRADES AND SUBCONTRACTORS.
14. INTERIOR AND EXTERIOR ABATEMENT IS TO BE PERFORMED AND STAGED AT MAINTENANCE AND REPAIR BUILDING'S EXTERIOR SLOPED ROOF.

DEMO. DRAWING KEY

- Elements to be demolished
- Elements to be remove & relocated
- Demo. Roof
- Exist. drain to be demolished
- Exist. roof vent to be demolished
- Exist. roof vent

KEY PLAN AREA

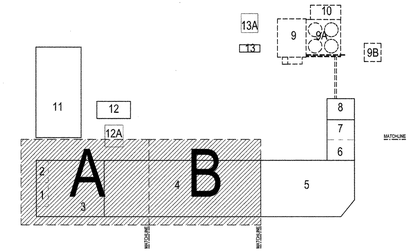

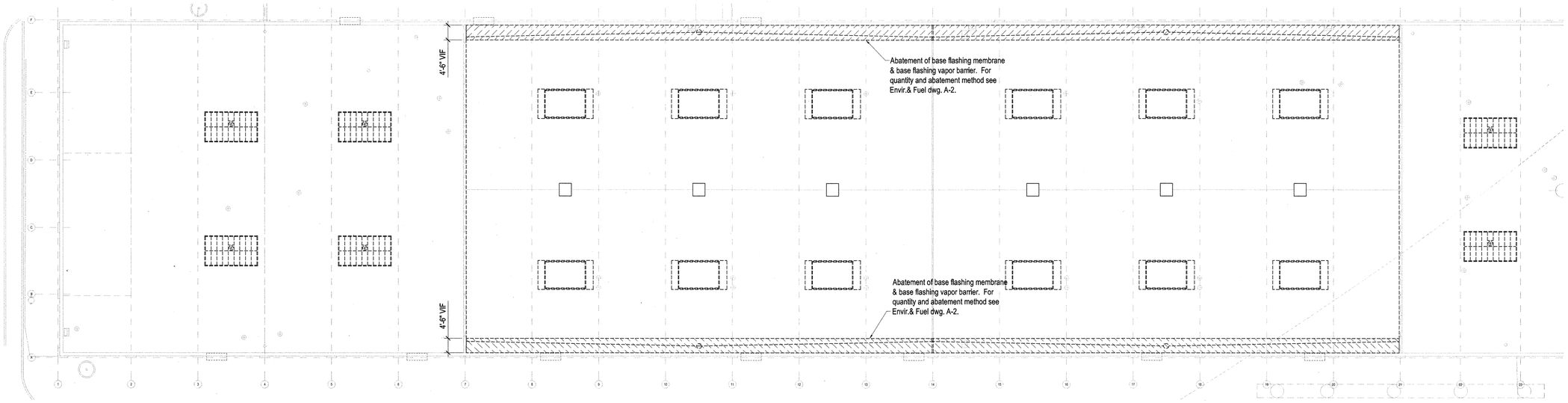

1 ROOF ABATEMENT PARTIAL PLAN "A & B"
1/16" = 1'-0

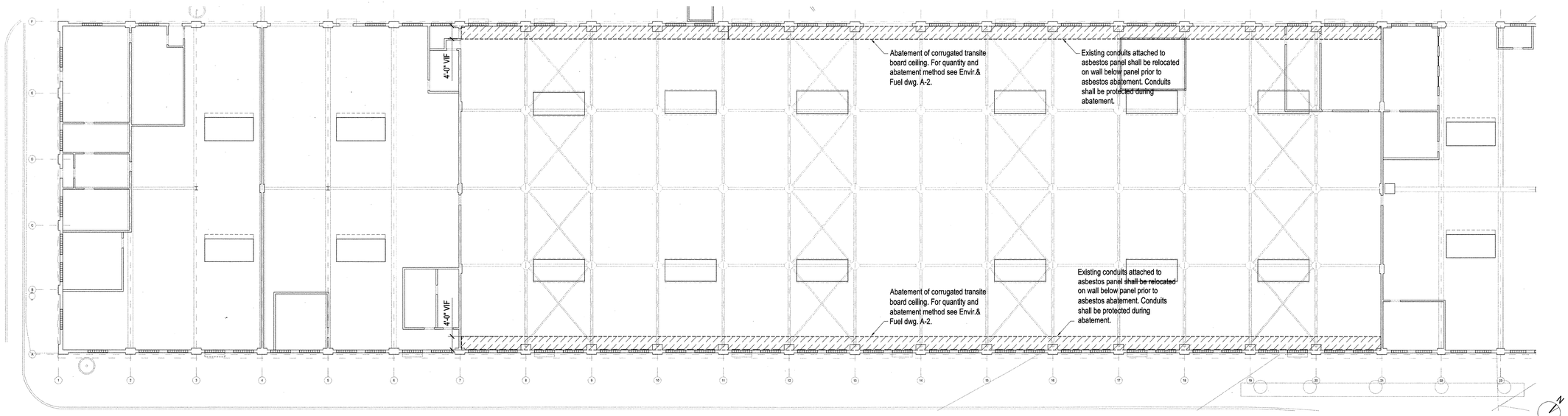

2 FIRST FLOOR RCP ABATEMENT PARTIAL PLAN "A & B"
1/16" = 1'-0

NEW YORK CITY DEPARTMENT OF DESIGN + CONSTRUCTION
DIVISION OF STRUCTURES
BUREAU OF ARCHITECTURE & ENGINEERING

PROJECT NAME:
HARPER ST. YARD

32-11 HARPER STREET,
QUEENS, NY 11368
CAPITAL PROJECT NUMBER
HWQF027C

Architect:
nARCHITECTS, PLLC
68 JAY #317
BROOKLYN, NY 11201
T: 718.260.0845 F: 718.260.0847

MEP Engineer:
PLUS GROUP
231 WEST 29th STREET, RM. 706
NEW YORK, NY 10001
T: 212.233.2700 F: 212.233.2727

Structural Engineer:
ROBERT SILMAN ASSOCIATES
88 UNIVERSITY PLACE
NEW YORK, NY 10003
T: 212.620.7970 F: 212.620.8157

Environmental & Fuel Consultant:
URS
77 GOODELL STREET
BUFFALO, NY 14203
T: 716.856.5636 F: 716.856.2545

Code Consultant:
J CALLAHAN CONSULTING INC.
299 BROADWAY SUITE 1420
NEW YORK, NY 10007
T: 212.766.2115 F: 212.766.2787

Date:	Issue:
05.19.10	75% SD
06.02.10	80% SD
11.17.10	100% Schematic Design
02.09.11	100% Design Dev.
04.06.11	75% CD
03.07.12	100% CD
06.06.12	100% CD - Revised
10.12.12	**Bid Set**

Sheet title:
ABATEMENT PLAN
PARTIAL PLAN "A & B"

Scale: 1/16" = 1'-0"

Seal and Signature:

Date: 09.28.12
Project No.: 0902
Dwg By: MP
Chk By: MH

Dwg No:
H-003

GENERAL NOTES

1. THE ASBESTOS ABATEMENT CONTRACTOR SHALL PERFORM ASBESTOS ABATEMENT WITHIN THE TIRE SHOP, MAINTENANCE SHOP, AND HEAVY EQUIPMENT SHOP. THE CONTRACTOR IS RESPONSIBLE FOR IDENTIFYING AND REMEDIATING IDENTIFIED ASBESTOS CONTAINING MATERIALS LISTED ON THE TABLES BELOW WITHIN THE CLOUDED AREA SHOWN. THE ASBESTOS CONTAINING MATERIAL LISTED ON THE TABLES BELOW WERE CHARACTERIZED AND QUANTIFIED IN THE REPORT ENTITLED, "FINAL REPORT FOR ASBESTOS SERVICES, HARPER STREET YARD, DEMOLITION OF BUILDING 9, 9A AND 10 AND FLOOR LEVELING, EXHAUST SYSTEM AND ROOF UPGRADE BUILDINGS 1, 2, 3, 4 AND 5, 32 HARPER STREET, QUEENS, NEW YORK 11231", PREPARED BY ATC ASSOCIATES, INC. DATED FEBRUARY 8, 2010 (THIS REPORT IS INCLUDED AS APPENDIX A OF THE CONTRACT SPECIFICATIONS).
2. ASBESTOS ABATEMENT CONTRACTOR SHALL PERFORM ALL WORK IN STRICT ACCORDANCE WITH ALL APPLICABLE LOCAL, STATE AND FEDERAL RULES, REGULATIONS, AND GUIDELINES, APPROVED VARIANCES AND THE CONTRACT DOCUMENTS.
3. ALL MATERIAL MEASUREMENTS AND/OR QUANTITIES AND LOCATIONS ARE APPROXIMATE. ASBESTOS ABATEMENT CONTRACTOR IS RESPONSIBLE FOR FIELD VERIFICATION AT THE SITE. BUILDING OWNER IS NOT RESPONSIBLE FOR MATERIAL ESTIMATES.
4. ASBESTOS ABATEMENT CONTRACTOR IS RESPONSIBLE FOR KEEPING THE WORK AREA IN A CLEAN AND SAFE CONDITION AND SHALL ENSURE THAT UNCERTIFIED PERSONNEL OR UNAUTHORIZED VISITORS DO NOT ENTER ACTIVE WORK AREAS OR WASTE HOLDING AREAS AT ANY TIME.
5. ASBESTOS ABATEMENT CONTRACTOR SHALL PROVIDE TEMPORARY PROTECTION TO KEEP THE WORK AREAS AND BUILDING IN A SECURE AND WATERTIGHT CONDITION AT ALL TIMES DURING THE PERFORMANCE OF THE CONTRACTOR'S WORK. THE CONTRACTOR SHALL BE RESPONSIBLE FOR ANY DAMAGE CAUSED AS A RESULT OF IMPROPER TEMPORARY PROTECTION.
6. THE PROVISIONS OF ANY SITE SPECIFIC VARIANCE OBTAINED BY THE CONTRACTOR MAY NOT BE IMPLEMENTED UNTIL AND UNLESS APPROVAL IS GIVEN BY THE OWNER OR THE OWNER'S REPRESENTATIVE.
7. CONTRACTOR SHALL BE RESPONSIBLE FOR REPLACING ANY EQUIPMENT, MATERIAL, PROPERTY, ETC. DAMAGED AS A RESULT OF THE CONTRACTOR'S WORK AT NO COST TO THE BUILDING OWNER.
8. THE ASBESTOS ABATEMENT CONTRACTOR SHALL COORDINATE WITH OWNER OR OWNER'S REPRESENTATIVE FOR LOCATION OF TEMPORARY FACILITIES. STAGING AREAS AND DUMPSTER PLACEMENT SHALL BE LIMITED TO LOCATIONS AS DESIGNATED BY OWNER OR OWNER'S REPRESENTATIVE. CONTRACTOR SHALL BE RESPONSIBLE FOR SECURING STAGING AND STORAGE AREAS.
9. ANY QUESTIONABLE MATERIAL OR MATERIAL SUSPECTED TO CONTAIN ASBESTOS WHICH IS NOT ALREADY BEEN ADDRESSED IN THE ATC 2010 SURVEY REPORT SHALL NOT BE DISTURBED AND SHALL BE BROUGHT TO THE ATTENTION OF THE OWNER OR THE OWNER'S REPRESENTATIVE FOR AN ACCURATE INTERPRETATION AND/OR SAMPLING AND ANALYSIS.

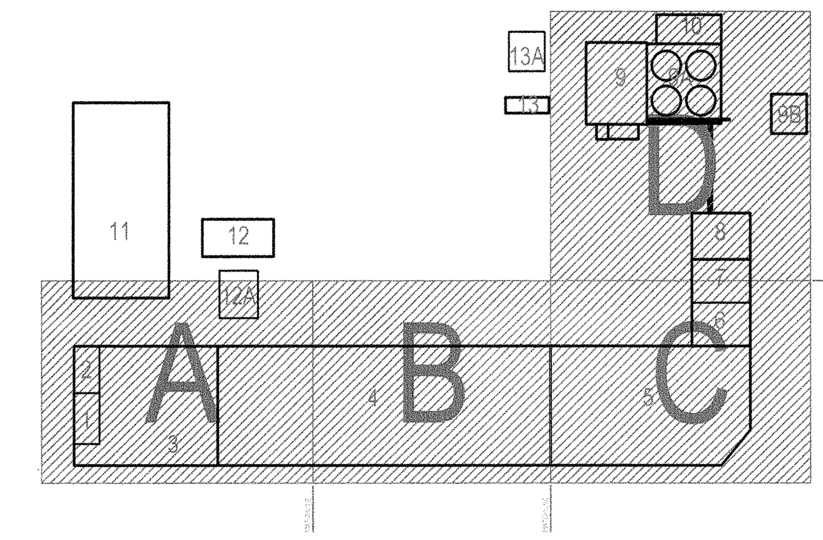

1 KEY PLAN AREA
N.T.S

BUILDING 4 – MAINTENANCE SHOP:

ACM MATERIAL	QUANTITY	ABATEMENT METHOD
BASE FLASHING MEMBRANE BASE FLASHING VAPOR BARRIER	560 SQ. FT	FOAM PROCEDURE FOR ROOF REMOVAL
CORRUGATED TRANSITE CEILING PANEL MATERIAL	3,500 SQ. FT	FROM EXTERIOR ROOF (NOT FULL CONTAINMENT)

BUILDING 5 – HEAVY EQUIPMENT SHOP:

ACM MATERIAL	QUANTITY	ABATEMENT METHOD
BASE FLASHING MEMBRANE BASE FLASHING TAR PAPER BASE FLASHING VAPOR BARRIER	540 SQ. FT	FOAM PROCEDURE FOR ROOF REMOVAL

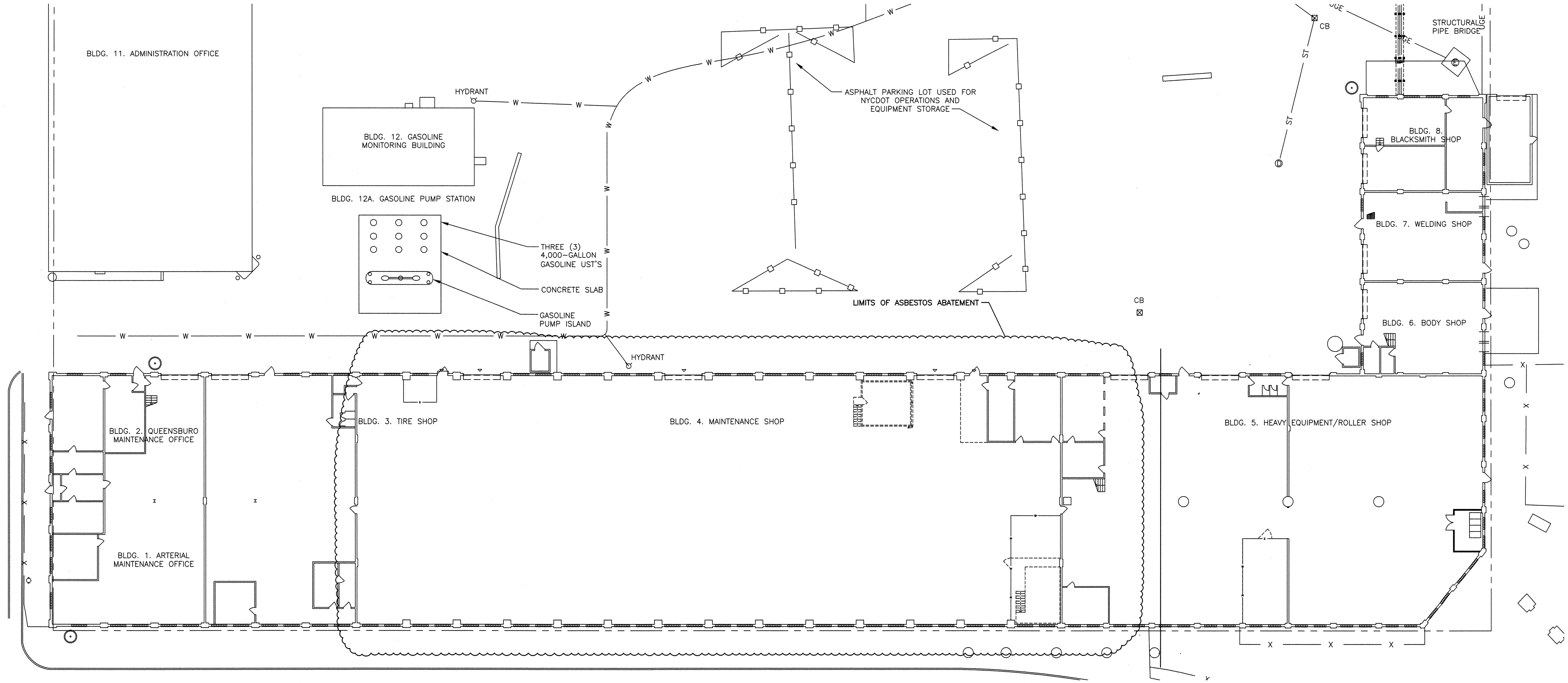

EXISTING CONDITIONS PLAN

20' 0 20'
SCALE IN FEET

I:\11176180\04 Drawings\06–Final Design\05–MECHANICAL\H–002.dwg, 6/5/12 –2 ELB

NEW YORK CITY DEPARTMENT OF DESIGN + CONSTRUCTION
DIVISION OF STRUCTURES
BUREAU OF ARCHITECTURE & ENGINEERING

PROJECT NAME:
HARPER ST. YARD

32-11 HARPER STREET,
QUEENS, NY 11368
CAPITAL PROJECT NUMBER
HWQF027C

Architect:
nARCHITECTS, PLLC
68 JAY #317
BROOKLYN, NY 11201
T: 718.260.0845 F: 718.260.0847

MEP Engineer:
PLUS GROUP
231 WEST 29th STREET, RM. 706
NEW YORK, NY 10001
T: 212.233.2700 F: 212.233.2727

Structural Engineer:
ROBERT SILMAN ASSOCIATES
88 UNIVERSITY PLACE
NEW YORK, NY 10003
T: 212.620.7970 F: 212.620.8157

Environmental & Fuel Consultant:
URS
77 GOODELL STREET
BUFFALO, NY 14203
T: 716.856.5636 F: 716.856.2545

Code Consultant:
J CALLAHAN CONSULTING INC.
299 BROADWAY SUITE 1420
NEW YORK, NY 10007
T: 212.766.2115 F: 212.766.2787

Date:	Issue:
05.19.10	75% SD
06.02.10	80% SD
11.17.10	100% Schematic Design
02.09.11	100% Design Dev.
04.06.11	75% CD
03.07.12	100% CD
06.06.12	100% CD - Revised
10.12.12	**Bid Set**

Sheet title:
ASBESTOS AND HAZARDOUS MATERIALS ABATEMENT SITE PLAN
Scale: AS SHOWN

Seal and Signature:
STATE OF NEW YORK · ROBERT E. [illegible] · LICENSE NO. 065031 · LICENSED PROFESSIONAL ENGINEER

Date: 10.12.12
Project No.: 0902
Dwg By: BAK
Chk By: KJS

Dwg No:
H-002

GENERAL PHASING NOTES

1. THE PURPOSE OF THESE PHASING NOTES IS TO PROVIDE A SUGGESTION FOR THE SEQUENCE OF WORK. THEY ARE NOT MEANT TO BE EXHAUSTIVE AND HIGHLIGHT ONLY THE CRITICAL PATHS. REFER TO DETAILED NOTES UNDER ASBESTOS, DEMOLITION, ARCHITECTURAL, STRUCTURAL, AND MEP DRAWINGS. THE CONTRACTOR SHALL PROVIDE A STAGING PLAN DETAILING THE SEQUENCE OF CONSTRUCTION FOR APPROVAL BY THE OWNER.
2. CONTRACTOR SHALL SUBMIT A DETAILED WORK PLAN DOCUMENTING AREAS OF PROPOSED OCCUPATION FOR CONSTRUCTION REQUIREMENTS. THIS PLAN WILL BE APPROVED BY DOT FACILITY MANAGEMENT.
3. THE ASBESTOS ABATEMENT CONTRACTOR SHALL PERFORM ASBESTOS AND HAZARDOUS MATERIALS ABATEMENT WITHIN THE BOILER BUILDING, PUMP HOUSE BUILDING, 70,000-GALLON AST SECONDARY CONTAINMENT AND MAINTENANCE AND REPAIR BUILDING PRIOR TO ANY DEMOLITION WORK. (See AS-001, AS-002 and AS-003).
4. TERMINATION OF WATER, ELECTRIC, NATURAL GAS, SANITARY SEWER, AND COMMUNICATIONS TO THE BOILER BUILDING WILL BE PERFORMED PRIOR TO INITIATION OF DEMOLITION WORK. (See DM-302, DM-303)
5. UTILITIES THAT PENETRATE THE BLACKSMITH SHOP WALL WILL BE CUT/CAPPED FROM THE EXTERIOR OF THE BUILDING PRIOR TO DEMOLITION. (See DM-300)
6. POWER TO THE EXISTING DIESEL FUELING STATION IS CURRENTLY SUPPLIED FROM ELECTRIC PANELS WITHIN THE ENTRANCE OF THE BOILER PLANT. PRIOR TO DEMOLITION THIS POWER SUPPLY WILL BE TERMINATED AND A NEW TEMPORARY UNDERGROUND POWER SUPPLY FROM THE BLACKSMITH SHOP TO A NEW JUNCTION BOX WILL BE LOCATED NEAR THE NORTHWEST CORNER OF THE BLACKSMITH SHOP. (See E-100D)
7. REMOVAL OF EXISTING DIESEL STATION MONITORING BOOTH (1 STORY SHED) SHOULD BE PHASED TO OCCUR AFTER NEW POWER SUPPLY HAS BEEN ENERGIZED TO THE EXIST. PUMP STATION. THE CONTRACTOR IS REQUIRED TO SEQUENCE WORK SUCH THAT THE FACILITY WILL BE PROVIDED UNINTERRUPTED DIESEL FUEL SYSTEM SERVICE UNTIL THE NEW MONITORING BOOTH AND NEW PUMP STATION IS OPERABLE. (See DM-302/DM-303)
8. DISCONNECTION AND ABANDONMENT OF POWER AND INSTRUMENTATION TO THE EXISTING DIESEL FUELING SYSTEM IS

SITE PLAN DRAWING KEY

A,B,C,D	Partial Plan Area Locations
MATCHLINE	Matchline for drawing zones
	LED two cobra head's mounted on light standard

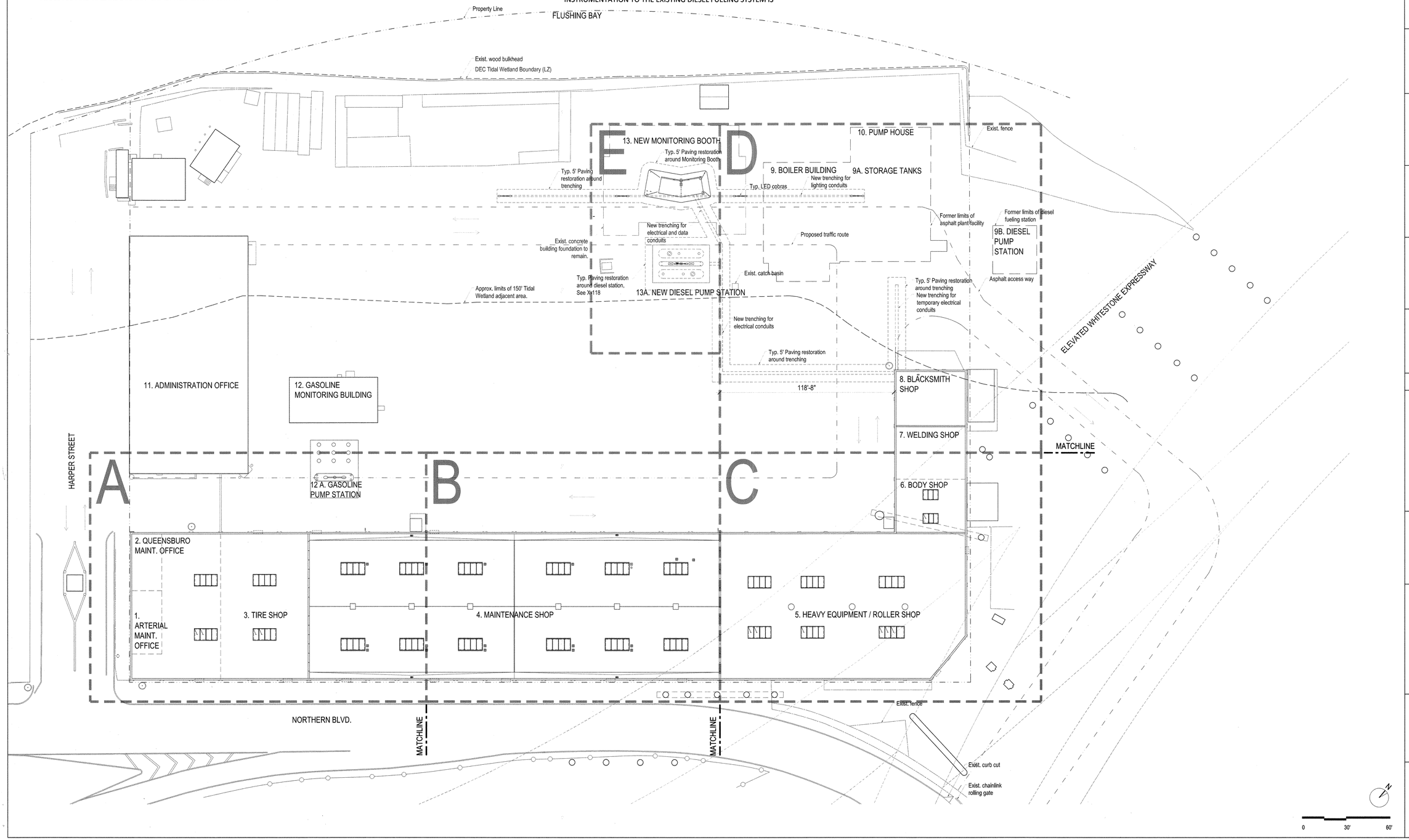

NEW YORK CITY DEPARTMENT OF DESIGN + CONSTRUCTION
DIVISION OF STRUCTURES
BUREAU OF ARCHITECTURE & ENGINEERING

PROJECT NAME:
HARPER ST. YARD

32-11 HARPER STREET,
QUEENS, NY 11368
CAPITAL PROJECT NUMBER
HWQF027C

Architect:
nARCHITECTS, PLLC
68 JAY #317
BROOKLYN, NY 11201
T: 718.260.0845 F: 718.260.0847

MEP Engineer:
PLUS GROUP
231 WEST 29th STREET, RM. 706
NEW YORK, NY 10001
T: 212.233.2700 F: 212.233.2727

Structural Engineer:
ROBERT SILMAN ASSOCIATES
88 UNIVERSITY PLACE
NEW YORK, NY 10003
T: 212.620.7970 F: 212.620.8157

Environmental & Fuel Consultant:
URS
77 GOODELL STREET
BUFFALO, NY 14203
T: 716.856.5636 F: 716.856.2545

Code Consultant:
J CALLAHAN CONSULTING INC.
299 BROADWAY SUITE 1420
NEW YORK, NY 10007
T: 212.766.2115 F: 212.766.2787

Date:	Issue:
05.19.10	75% SD
06.02.10	80% SD
11.17.10	100% Schematic Design
02.09.11	100% Design Dev.
04.06.11	75% CD
03.07.12	100% CD
06.06.12	100% CD - Revised
10.12.12	**Bid Set**

Sheet title:
PROPOSED SITE PLAN
Scale: 1" = 30'-0"

Seal and Signature:
REGISTERED ARCHITECT Ming Hai Tram Chu Huang 030935 STATE OF NEW YORK

Date: 09.28.12
Project No.: 0902
Dwg By: MP
Chk By: MH

Dwg No:
A-000.00

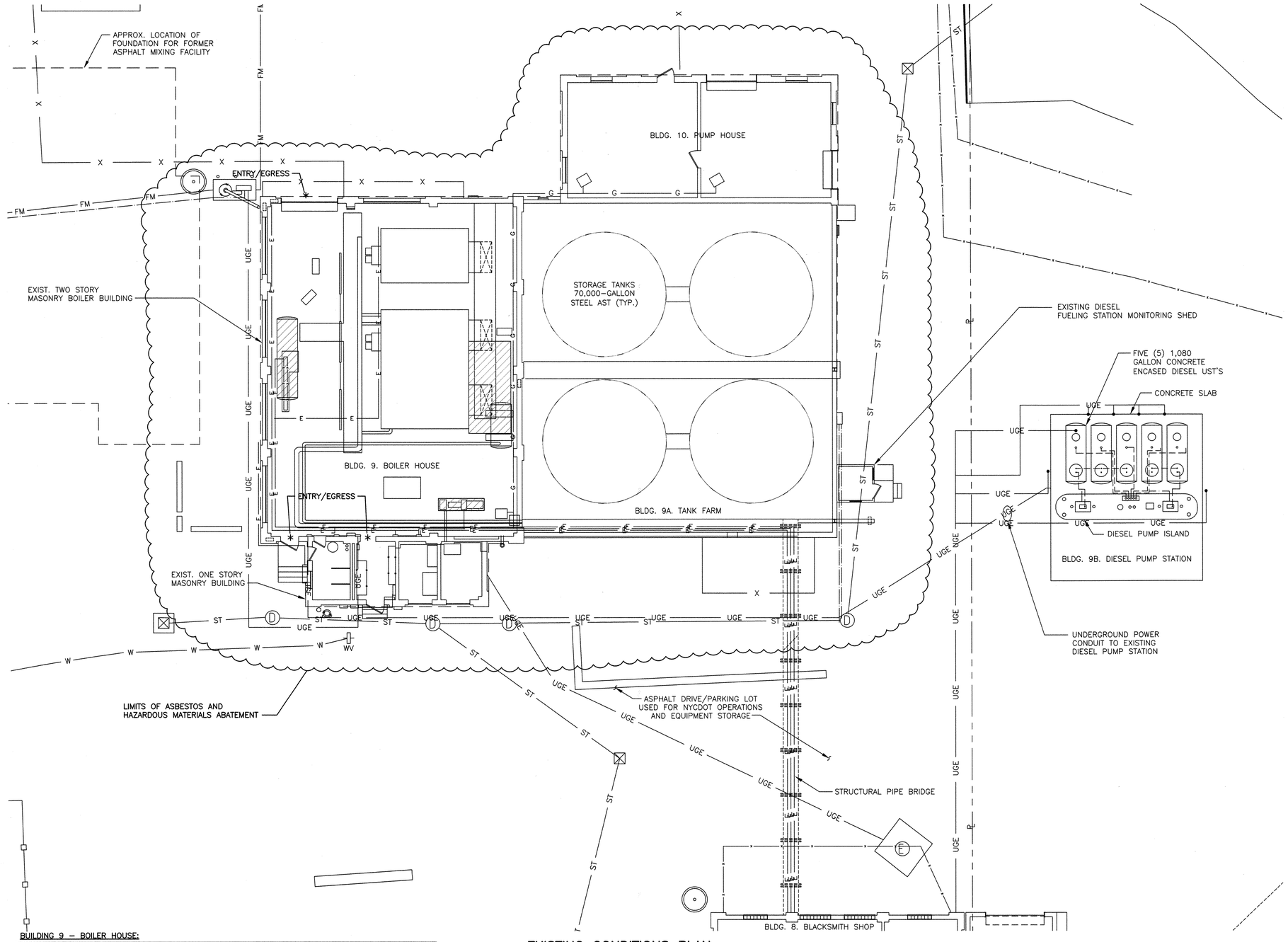

EXISTING CONDITIONS PLAN

10' 0 10'
SCALE IN FEET

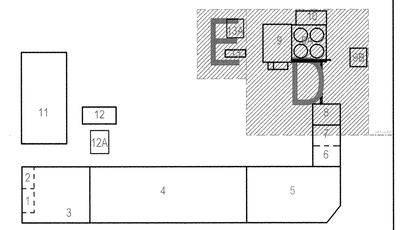

1 KEY PLAN AREA
N.T.S

BUILDING 9 – BOILER HOUSE:

ACM MATERIAL	QUANTITY	ABATEMENT METHOD
ASBESTOS CONTAMINATED DEBRIS	1,500 SQ. FT	FULL CONTAINMENT
BOILER BREECHING	1,000 SQ. FT	
CEMENTITIOUS BOILER INSULATION	750 SQ. FT	
PIPE INSULATION AND PIPE FITTING INSULATION	800 LF	
BOILER HATCH GASKETS	7 OPENINGS	
INTERIOR/EXTERIOR WINDOW GLAZING	324 SQ. FT. OF WINDOW GLAZING (3,888 LF WITHIN 648 WINDOW PANES)	§1–109 ABATEMENT FROM VERTICAL EXTERIOR SURFACES
INTERIOR/EXTERIOR BLACK WINDOW GLAZING	60 SQ. FT. WINDOW CAULKING (702 LF WITHIN 9 MASONRY OPENINGS)	
ABANDONED TRANSITE PANEL (MAIN ROOF)	20 SQ. FT.	WRAP IN 2 LAYERS OF POLY AND DISPOSE
ELECTRICAL BACK–UP BOARDS	50 SQ. FT.	WRAP IN 2 LAYERS OF POLY AND DISPOSE
BLACK CAULKING ON CAP FLASHING SEAM (SETBACK ROOF)	2 SQ. FT. OR 20 LF OF BLACK CAULKING	§1–107 FOAM PROCEDURE FOR ROOF REMOVAL

BUILDING 9A – TANK FARM:

ACM MATERIAL	QUANTITY	ABATEMENT METHOD
PIPE AND PIPE FITTING INSULATION	300 LF	§1–105 GLOVEBAG PROCEDURE

BUILDING 10 – SUPPLY BUILDING:

ACM MATERIAL	QUANTITY	ABATEMENT METHOD
ROOFING MATERIALS	1,460 SQ. FT.	§1–107 FOAM PROCEDURE FOR ROOF REMOVAL
TAR ASSOCIATED WITH COPPER AND MEMBRANE FLASHING	170 SQ. FT.	

GENERAL NOTES

1. THE ASBESTOS ABATEMENT CONTRACTOR SHALL PERFORM ASBESTOS AND HAZARDOUS MATERIALS ABATEMENT WITHIN THE BOILER BUILDING, PUMP HOUSE BUILDING, AND 70,000–GALLON AST SECONDARY CONTAINMENT PRIOR TO THE DEMOLITION WORK. THE CONTRACTOR IS RESPONSIBLE FOR IDENTIFYING, AND REMEDIATING IDENTIFIED ASBESTOS CONTAINING MATERIALS WITHIN THE CLOUDED AREA SHOWN. IN ADDITION, THE CONTRACTOR IS RESPONSIBLE FOR IDENTIFYING, CHARACTERIZING AND REMEDIATING ANY HAZARDOUS MATERIALS PRESENT WITHIN THE CLOUDED AREA SHOWN (EXCEPT FOR RESIDUAL SLUDGE MATERIAL IN 70,000 ASTS AND SECONDARY CONTAINMENT AREA). AT A MINIMUM, THE CONTRACTOR SHALL REMEDIATE AND DISPOSE OF THE FOLLOWING:
   A. ASBESTOS CONTAINING MATERIALS CHARACTERIZED AND QUANTIFIED IN THE TABLE FOUND ON THE BOTTOM OF THIS DRAWING AND IN THE REPORT ENTITLED, "FINAL REPORT FOR ASBESTOS SERVICES., HARPER STREET YARD, DEMOLITION OF BUILDING 9, 9A AND 10 AND FLOOR LEVELING, EXHAUST SYSTEM AND ROOF UPGRADE BUILDINGS 1, 2, 3, 4 AND 5, 32 HARPER STREET, QUEENS, NEW YORK 11231," PREPARED BY ATC ASSOCIATES, INC. DATED FEBRUARY 8, 2010. (THIS REPORT IS INCLUDED AS APPENDIX A OF THE CONTRACT SPECIFICATIONS).
   B. FLORESCENT LIGHT FIXTURES/SWITCHES, MISCELLANEOUS PAILS/DRUMS, LEAD BASED PAINT, CHEMICALS, SOLVENTS, AND ANY OTHER HAZARDOUS MATERIALS, ETC.
   C. ELECTRIC TRANSFORMERS AND CAPACITORS POTENTIALLY CONTAINING PCB'S (POLYCHLORINATED BIPHENYLS).
2. THE DEMOLITION CONTRACTOR SHALL BE RESPONSIBLE FOR CHARACTERIZING AND DISPOSING OF SLUDGE/SEDIMENT WITHIN THE ASTS AND SECONDARY CONTAINMENT DIKE.
3. ASBESTOS ABATEMENT CONTRACTOR SHALL PERFORM ALL WORK IN STRICT ACCORDANCE WITH ALL APPLICABLE LOCAL, STATE AND FEDERAL RULES, REGULATIONS, AND GUIDELINES, APPROVED VARIANCES AND THE CONTRACT DOCUMENTS.
4. ALL MATERIAL MEASUREMENTS AND/OR QUANTITIES AND LOCATIONS ARE APPROXIMATE. ASBESTOS ABATEMENT CONTRACTOR IS RESPONSIBLE FOR FIELD VERIFICATION AT THE SITE. BUILDING OWNER IS NOT RESPONSIBLE FOR MATERIAL ESTIMATES.
5. ASBESTOS ABATEMENT CONTRACTOR IS RESPONSIBLE FOR KEEPING THE WORK AREA IN A CLEAN AND SAFE CONDITION AND SHALL ENSURE THAT UNCERTIFIED PERSONNEL OR UNAUTHORIZED VISITORS DO NOT ENTER ACTIVE WORK AREAS OR WASTE HOLDING AREAS AT ANY TIME.
6. ASBESTOS ABATEMENT CONTRACTOR SHALL PROVIDE TEMPORARY PROTECTION TO KEEP THE WORK AREAS AND BUILDING IN A SECURE AND WATERTIGHT CONDITION AT ALL TIMES DURING THE PERFORMANCE OF THE CONTRACTOR'S WORK. THE CONTRACTOR SHALL BE RESPONSIBLE FOR ANY DAMAGE CAUSED AS A RESULT OF IMPROPER TEMPORARY PROTECTION.
7. CONTRACTOR SHALL APPLY FOR VARIANCE TO CONDUCT GLOVEBAG REMOVAL IN BUILDING 9A TANK FARM. THE PROVISIONS OF ANY SITE SPECIFIC VARIANCE OBTAINED BY THE CONTRACTOR MAY NOT BE IMPLEMENTED UNTIL AND UNLESS APPROVAL IS GIVEN BY THE OWNER OR THE OWNER'S REPRESENTATIVE.
8. CONTRACTOR SHALL BE RESPONSIBLE FOR REPLACING ANY EQUIPMENT, MATERIAL, PROPERTY, ETC. DAMAGED AS A RESULT OF THE CONTRACTOR'S WORK AT NO COST TO THE BUILDING OWNER.
9. THE ASBESTOS ABATEMENT CONTRACTOR SHALL COORDINATE WITH OWNER OR OWNER'S REPRESENTATIVE FOR LOCATION OF TEMPORARY FACILITIES. STAGING AREAS AND DUMPSTER PLACEMENT SHALL BE LIMITED TO LOCATIONS AS DESIGNATED BY OWNER OR OWNER'S REPRESENTATIVE. CONTRACTOR SHALL BE RESPONSIBLE FOR SECURING STAGING AND STORAGE AREAS.
10. DURING FULL CONTAINMENT ACTIVITIES THE ABATEMENT CONTRACTOR SHALL MAINTAIN ONE MEANS OF ENTRY AND EGRESS AT EACH END OF THE BUILDING AS SHOWN.
11. ANY QUESTIONABLE MATERIAL OR MATERIAL SUSPECTED TO CONTAIN ASBESTOS WHICH IS NOT ALREADY BEEN ADDRESSED IN THE ATC 2010 SURVEY REPORT SHALL NOT BE DISTURBED AND SHALL BE BROUGHT TO THE ATTENTION OF THE OWNER OR THE OWNER'S REPRESENTATIVE FOR AN ACCURATE INTERPRETATION AND/OR SAMPLING AND ANALYSIS.

NEW YORK CITY DEPARTMENT OF DESIGN + CONSTRUCTION
DIVISION OF STRUCTURES
BUREAU OF ARCHITECTURE & ENGINEERING

PROJECT NAME:
HARPER ST. YARD

32-11 HARPER STREET,
QUEENS, NY 11368
CAPITAL PROJECT NUMBER
HWQF027C

Architect:
nARCHITECTS, PLLC
68 JAY #317
BROOKLYN, NY 11201
T: 718.260.0845 F: 718.260.0847

MEP Engineer:
PLUS GROUP
231 WEST 29th STREET, RM. 706
NEW YORK, NY 10001
T: 212.233.2700 F: 212.233.2727

Structural Engineer:
ROBERT SILMAN ASSOCIATES
88 UNIVERSITY PLACE
NEW YORK, NY 10003
T: 212.620.7970 F: 212.620.8157

Environmental & Fuel Consultant:
URS
77 GOODELL STREET
BUFFALO, NY 14203
T: 716.856.5636 F: 716.856.2545

Code Consultant:
J CALLAHAN CONSULTING INC.
299 BROADWAY SUITE 1420
NEW YORK, NY 10007
T: 212.766.2115 F: 212.766.2787

Date:	Issue:
05.19.10	75% SD
06.02.10	80% SD
11.17.10	100% Schematic Design
02.09.11	100% Design Dev.
04.06.11	75% CD
03.07.12	100% CD
06.06.12	100% CD - Revised
10.12.12	**Bid Set**

Sheet title:
ASBESTOS AND HAZARDOUS MATERIALS ABATEMENT SITE PLAN
Scale: AS SHOWN

Seal and Signature:
STATE OF NEW YORK · ROBERT E. ROSSNY · LICENSE NO. 065501 · LICENSED PROFESSIONAL ENGINEER

Date: 10.12.12
Project No.: 0902
Dwg By: BAK
Chk By: KJS

Dwg No:
H-001

I:\1117818\0\04 Drawings\06-Final Design\05-MECHANICAL\H-001.dwg, 6/5/12 -2 ELB

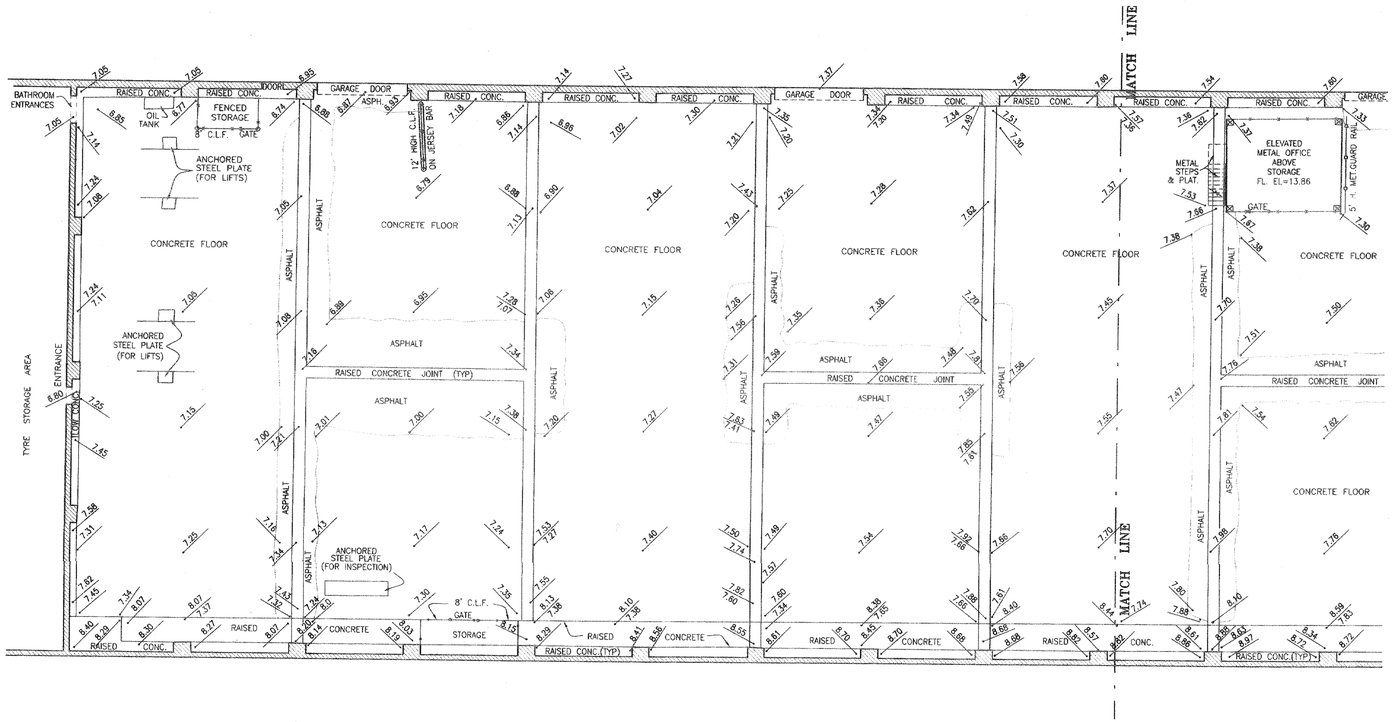

FLOOR PLAN

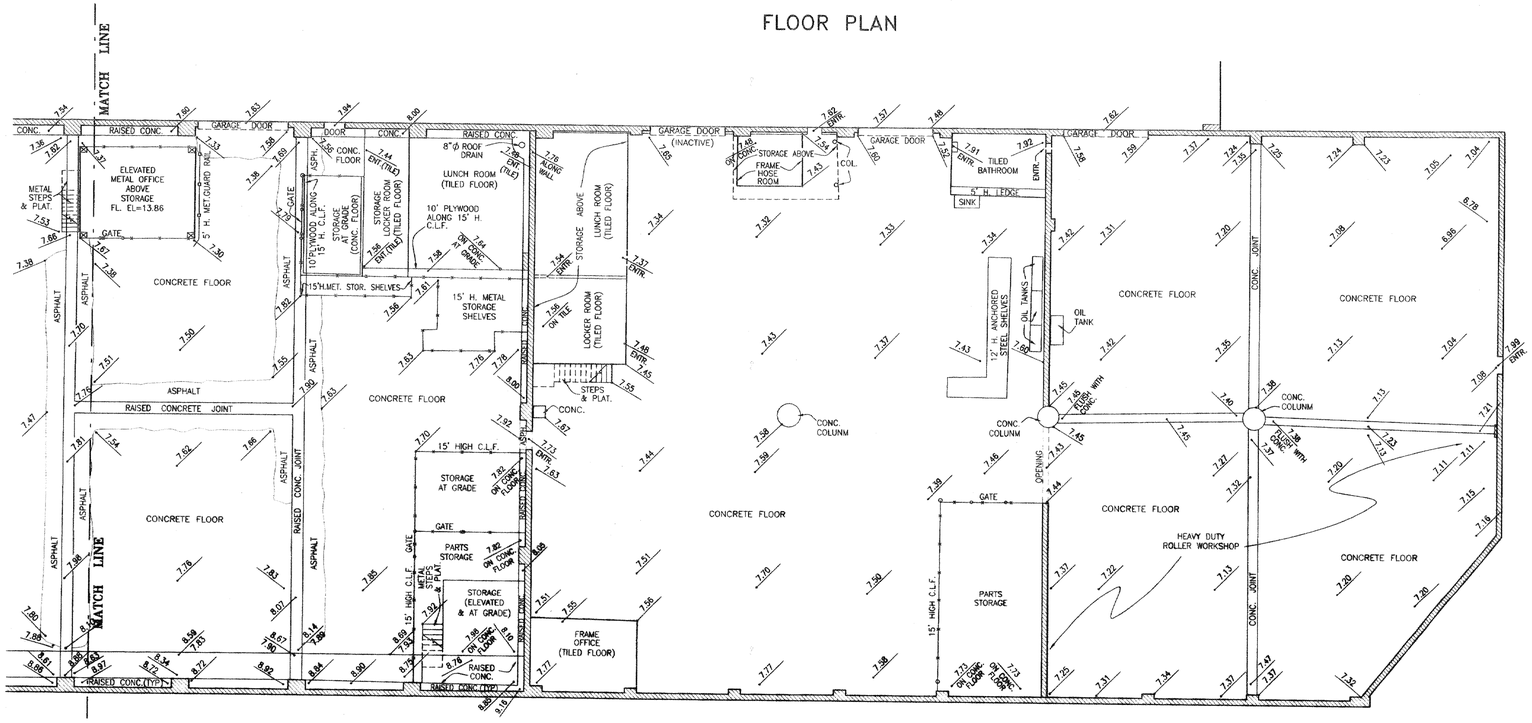

FLOOR PLAN

LEGEND

EXISTING ELEVATION ..... 50.54 / 50.17 ; TW 50.54 / BW 50.17

BUILDING .....

FENCE .....

GUIDE RAIL .....

NOTES

ALL ELEVATIONS SHOWN REFER TO THE QUEENS HIGHWAY DATUM WHICH IS 2.725 FEET ABOVE MEAN SEA LEVEL AT SANDY HOOK, NEW JERSEY AS ESTABLISHED BY THE U.S. COAST AND GEODETIC SURVEY.

ALL SUBSURFACE INFORMATION SHOWN IS TAKEN FROM VARIOUS MAPS AND IS NOT GUARANTEED FOR ACCURACY OR COMPLETENESS.

ALL DIMENSIONS SHOWN ARE IN THE U.S. STANDARD OF MEASUREMENT.

ALL ENCROACHMENTS SHOWN TO POLES OR TREES REFER TO THE CENTER OF SAME.

SITE COMPRISES: LOT 1 IN BLOCK 1790
AS SHOWN ON THE "TAX MAP" OF THE CITY OF NEW YORK.

FIELD SURVEY COMPLETED: 01/20/2010

"ONLY COPIES FROM THE ORIGINAL OF THIS SURVEY MARKED WITH AN ORIGINAL OF THE LAND SURVEYOR'S BLUE INKED OR EMBOSSED SEAL SHALL BE CONSIDERED TO BE A TRUE VALID COPY"

"UNAUTHORIZED ALTERATIONS OR ADDITION TO A LAND SURVEYING DRAWING BEARING A LICENSED PROFESSIONAL LAND SURVEYOR'S SEAL IS A VIOLATION OF ARTICLE 145, SECTION 7209 PARAGRAPH 2 OF THE NEW YORK STATE EDUCATION LAW"

ALL INFORMATION ON THIS MAP EXCEPT THAT PERTAINING TO THE PROPERTY LINE IS FOR REFERENCE ONLY.

CITY OF NEW YORK
DEPARTMENT OF DESIGN + CONSTRUCTION
DIVISION OF TECHNICAL SUPPORT

HWQF027C
2814 F
T2814F1G5789

BUREAU OF SITE ENGINEERING
TOPOGRAPHICAL SECTION

HARPER STREET YARD
MER BUILDING
32-11 HARPER STREET
BOROUGH OF QUEENS

FLOOR ELEVATIONS

DATE 02/11/10

10' 0' 10' 20'

SHEET 1 OF 1

PARTY CHIEF D. MANBODH
COMPUTATION _____ CHECKED _____
DRAFTED L. FREDERICKS CHECKED W. OATMAN
FIELD EDITED _____

OLTON OLIVER, L.S.
CHIEF
TOPOGRAPHICAL SECTION

ADOLPH HOEGLER
DIRECTOR
BUREAU OF SITE ENGINEERING

MARK A. CANU
ASSOCIATE COMMISSIONER
DIVISION OF TECHNICAL SUPPORT

NO.	DATE	DESCRIPTIONS	BY	APPR'D

REVISIONS

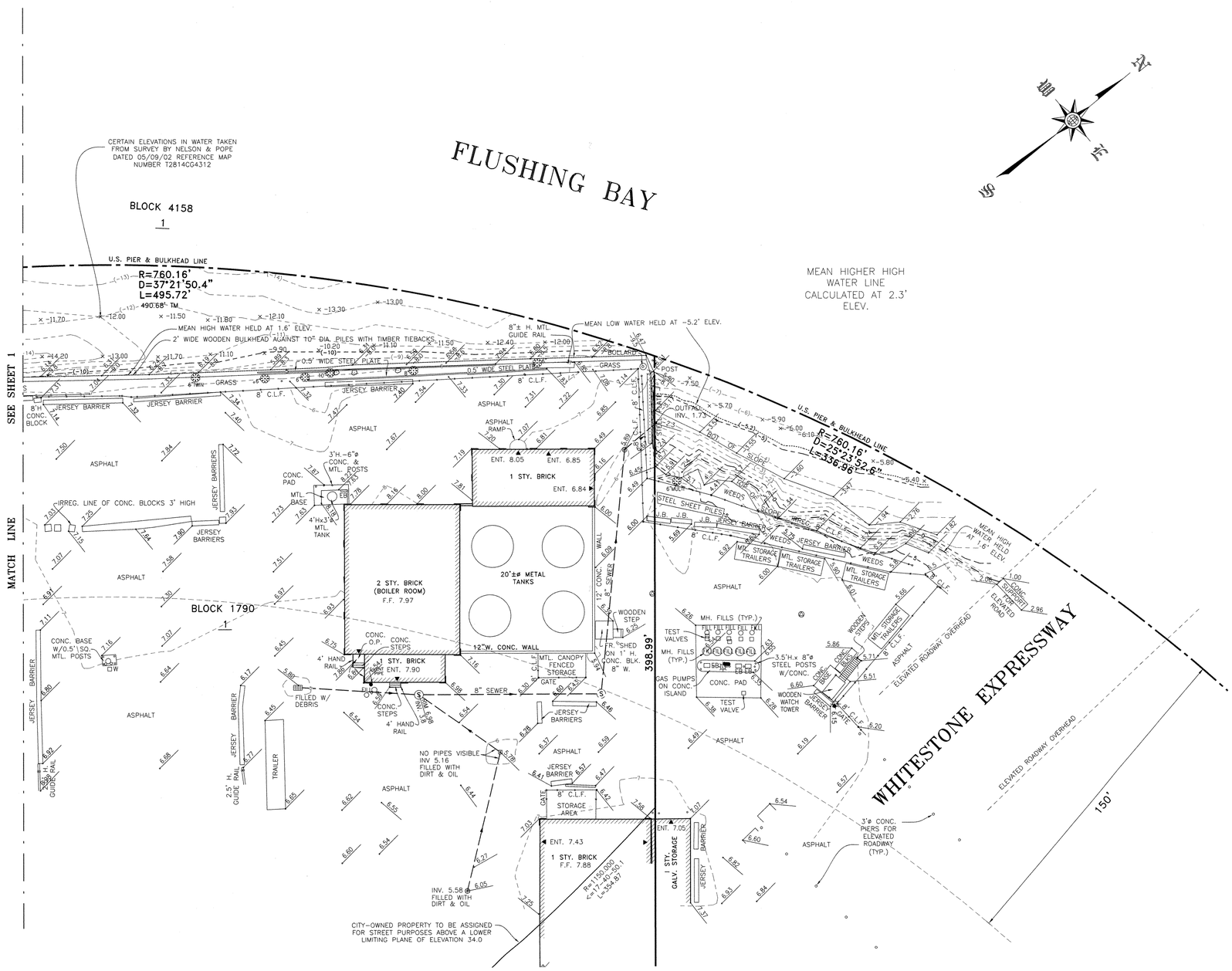

CITY OF NEW YORK
DEPARTMENT OF DESIGN + CONSTRUCTION
DIVISION OF TECHNICAL SUPPORT

BUREAU OF SITE ENGINEERING
TOPOGRAPHICAL SECTION

HWQF027C
2814 G

T2814G2rev1G5887

HARPER STREET YARD

32-11 HARPER ST., CORONA

BOROUGH OF QUEENS

TOPOGRAPHICAL MAP

DATE 11/8/10

20' 0' 20' 40'

SHEET 2 OF 2

PARTY CHIEF D. MANBODH
COMPUTATION K. MAHMOOD CHECKED O. OLIVER
DRAFTED C. VILLAMIL CHECKED O. OLIVER
FIELD EDITED

OLTON OLIVER, L.S.
CHIEF
TOPOGRAPHICAL SECTION

ADOLPH HOEGLER
DIRECTOR
BUREAU OF SITE ENGINEERING

MARK A. CANU
ASSOCIATE COMMISSIONER
DIVISION OF TECHNICAL SUPPORT

NO.	DATE	DESCRIPTIONS	BY	APPR'D
1	12/29/10	ADDED M.L.W. & M.H.H.W. NOTE	K.K.	O.O.

REVISIONS

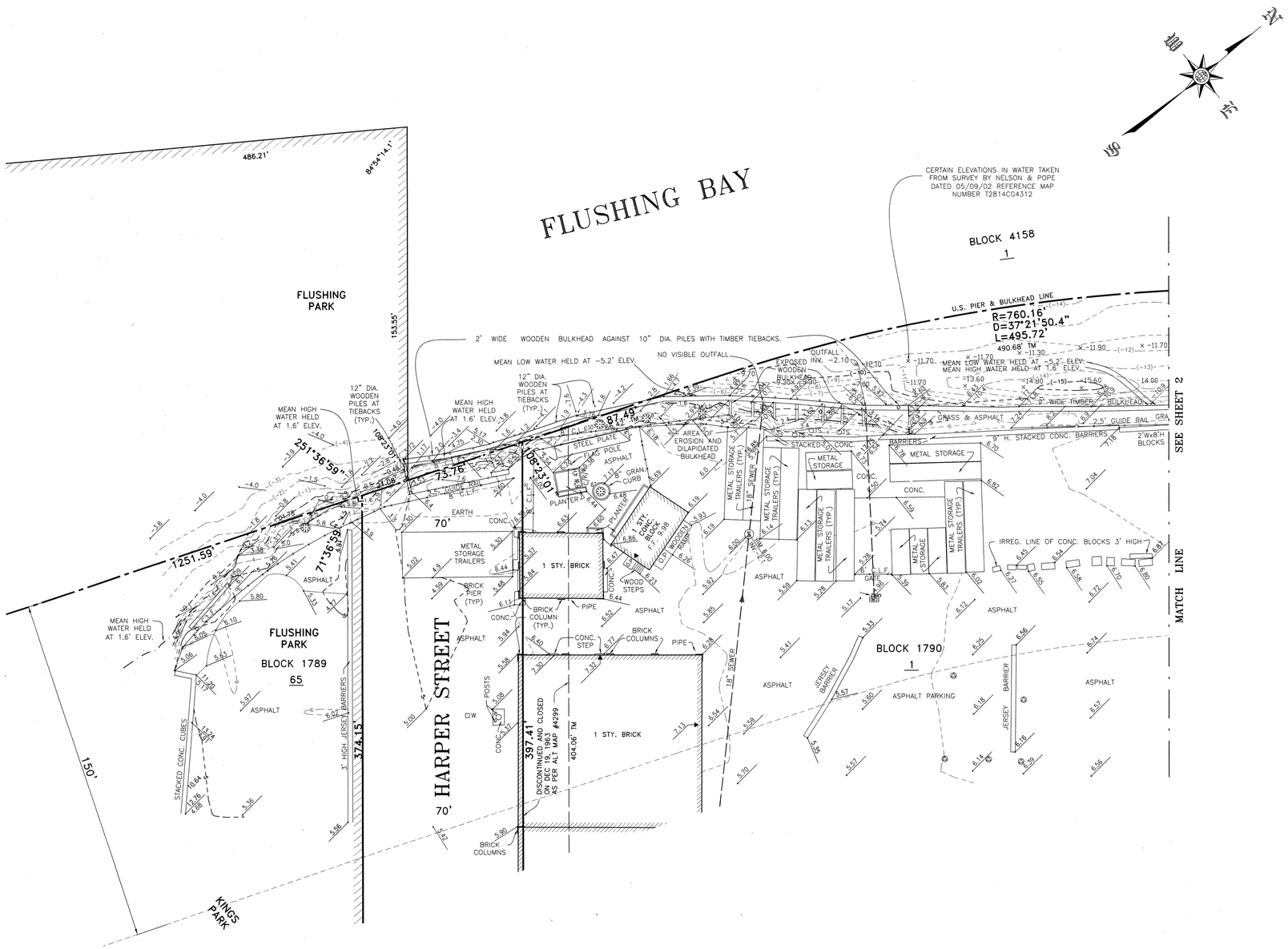

LEGEND

LEGAL GRADE	84.8
INTERPOLATED GRADE	84.8 INTP.
EXISTING ELEVATION	50.5 ± 50.47 BW
ENCROACHMENT	0.05'N 0.07'E
BUILDING	PARTY WALL / INDEPENDENT
WALLS	
FENCE	
GUIDE RAIL	
SEWER	
WATER	
GAS	
ELECTRIC	
TELEPHONE	
FIRE ALARM & OR CABLE	
STEAM	
OVERHEAD UTILITY LINE	A/E,T,C,F
U.S. PIERHEAD LINE	
U.S. BULKHEAD LINE	
U.S. PIERHEAD & BULKHEAD LINE	
CATCHBASIN	
FIRE HYDRANT	LOW PRESSURE / HIGH PRESSURE
VALVE	W / G / St / ?
TREE & TRUNK DIAMETER	24" (TREE) / 10" (EVERGREEN) / (SHRUB)
DEPRESSED CURB	DC
TAX LOT NUMBER	1
TAX LOT LINE & DIMENSION	40.00 T.M.
EASEMENT LINE	
STREET LINE & DIMENSION	200.00'
SITE LINE & DIMENSION	100'
LOT CROSSES LINE	
MEAN HIGH WATER LINE (M.H.W.)	1.6
MEAN LOW WATER LINE (M.L.W.)	(-5.2)

SYMBOLS

MANHOLES

- (S) SEWER
- (E) ELECTRIC
- (St) STEAM
- (Su) SUBWAY
- (MH) MANHOLE (NO ID)
- (S) FROM RECORD MAP
- (W) WATER
- (G) GAS
- (F) N.Y.F.D.
- (T) TELEPHONE
- (E) BECO or CTES
- (C) CABLE TV IRON

- TS TRAFFIC SIGN
- PARKING METER
- CC COAL CHUTE
- VENT PIPE
- F FIRE ALARM BOX
- TRAFFIC CONTROL BOX
- MB MAILBOX
- TEL PAY PHONE
- EB ELECTRIC BOX
- FILL OIL FILL
- MONUMENT
- STANDPIPE
- SPRINKLER
- ROUND DRAIN
- SQUARE DRAIN
- SIGN
- BORING HOLE
- MONITORING WELL
- DIRECTION OF TRAFFIC

- GUY WIRE
- T TRAFFIC SIGNAL
- PS PEDESTRIAN SIGNAL
- TPS TRAFFIC SIGNAL W/PEDESTRIAN SIGNAL
- WOOD UTILITY POLE
- F WOOD UTILITY POLE W/FIRE ALARM BOX
- PS WOOD UTILITY POLE W/PEDESTRIAN SIGNAL
- T WOOD UTILITY POLE W/TRAFFIC SIGNAL
- TPS WOOD UTILITY POLE W/TRAFFIC SIGNAL & PED. SIGNAL
- WOOD UTILITY POLE W/STREET LIGHT
- F WOOD UTILITY POLE W/STREET LIGHT & FIRE ALARM BOX
- PS WOOD UTILITY POLE W/STREET LIGHT & PEDESTRIAN SIGNAL
- T WOOD UTILITY POLE W/STREET LIGHT & TRAFFIC SIGNAL
- TPS WOOD UTILITY POLE W/STREET LIGHT, TRAF. SIGNAL & PED. SIGNAL
- METAL STREET LIGHT
- PS METAL STREET LIGHT W/PEDESTRIAN SIGNAL
- T METAL STREET LIGHT W/TRAFFIC SIGNAL
- TPS METAL STREET LIGHT W/TRAFFIC SIGNAL & PEDESTRIAN SIGNAL

NOTES

ALL ELEVATIONS SHOWN REFER TO THE QUEENS HIGHWAY DATUM WHICH IS 2.725 FEET ABOVE MEAN SEA LEVEL AT SANDY HOOK, NEW JERSEY AS ESTABLISHED BY THE U.S. COAST AND GEODETIC SURVEY.

ALL SUBSURFACE INFORMATION SHOWN IS TAKEN FROM VARIOUS MAPS AND IS NOT GUARANTEED FOR ACCURACY OR COMPLETENESS.

ALL DIMENSIONS SHOWN ARE IN THE U.S. STANDARD OF MEASUREMENT.

ALL ENCROACHMENTS SHOWN TO POLES OR TREES REFER TO THE CENTER OF SAME.

SITE COMPRISES: LOT 1 IN BLOCK 1790
AS SHOWN ON THE "TAX MAP" OF THE CITY OF NEW YORK.

FIELD SURVEY COMPLETED: 10/08/2010

"ONLY COPIES FROM THE ORIGINAL OF THIS SURVEY MARKED WITH AN ORIGINAL OF THE LAND SURVEYOR'S BLUE INKED OR EMBOSSED SEAL SHALL BE CONSIDERED TO BE A TRUE VALID COPY"

"UNAUTHORIZED ALTERATIONS OR ADDITION TO A LAND SURVEYING DRAWING BEARING A LICENSED PROFESSIONAL LAND SURVEYOR'S SEAL IS A VIOLATION OF ARTICLE 145, SECTION 7209 PARAGRAPH 2 OF THE NEW YORK STATE EDUCATION LAW"

ALL INFORMATION ON THIS MAP IS FOR REFERENCE ONLY.

THIS IS TO CERTIFY THAT THERE ARE NO VISIBLE STREAMS OR VISIBLE NATURAL WATER COURSES ACROSS THE PROPERTY EXCEPT THOSE SHOWN ON THIS SURVEY.

CITY OF NEW YORK
DEPARTMENT OF DESIGN + CONSTRUCTION
DIVISION OF TECHNICAL SUPPORT

BUREAU OF SITE ENGINEERING
TOPOGRAPHICAL SECTION

HWQF027C
2814 G
T2814G1rev1G5887

HARPER STREET YARD

32-11 HARPER ST., CORONA

BOROUGH OF QUEENS

TOPOGRAPHICAL MAP

DATE 11/8/10

20' 0' 20' 40'

SHEET 1 OF 2

PARTY CHIEF D. MANBODH
COMPUTATION K. MAHMOOD CHECKED O. OLIVER
DRAFTED C. VILLAMIL CHECKED O. OLIVER
FIELD EDITED

OLTON OLIVER, L.S.
CHIEF
TOPOGRAPHICAL SECTION

ADOLPH HOEGLER
DIRECTOR
BUREAU OF SITE ENGINEERING

MARK A. CANU
ASSOCIATE COMMISSIONER
DIVISION OF TECHNICAL SUPPORT

NO.	DATE	DESCRIPTIONS	BY	APPR'D
1	12/29/10	ADDED M.L.W. & M.H.H.W. NOTE	K.K.	O.O.

REVISIONS

DOOR SCHEDULE

*ALL DOOR DIMENSIONS TO BE VIF PRIOR TO ORDERING

DOOR NO.	TYPE	HEIGHT	WIDTH	THICK-NESS	DOOR MATERIAL	MANUFACTURER	DOOR FRAME	DOOR + FRAME FINISH	HARD-WARE	ADDITIONAL NOTES
D1 / D2	Exterior Storefront Swing	6'-8"	3'-0"	2"	INS. GLASS + ALUM	Option 1: OldCastle Thermal Entrance System w/ narrow stile	ALUM.	DF1	A, B, C, D, E, F	1" Insul. Glass: 1/4" tempered ext. Lite, 1/4" tempered int. lite w/ air gap. All glass to be low iron clear tempered.
				2-1/4"		Option 2: Kawneer AA250 w/ narrow stile				
				2"		Option 3: EFCO D202 Thermal w/ narrow stile				
D3	Interior Metal Swing	7'-0"	4'-0"	1-3/4"	STL. COMPOSITE	Option 1: Republic Doors	HOLLOW METAL	DF2	A, E, G, H	2 hour fire-rated
						Option 2: Securall				
						Option 3: Door Components				

DOOR HARDWARE TYPES

KEY	HARDWARE SET	MANUFACTURER/TYPE	FINISH	ADDITIONAL NOTES
A	Hinge	Option 1: Old Castle BH-1	SS	
		Option 2: Kawneer Butt Hinge 4-1/2"x 4"		
		Option 2: EFCO Butt Hinge 5"x 4-1/2		
B	Exterior Pull	Option 1: OldCastle - Adams-Rite 4593	Matte alum., satin chrome, or sim.	See Adams-Rite for installation + hardware specs on 2" door
		Option 2: Kawneer - Adams-Rite 4593		
		Option 3: EFCO - Adams-Rite 4593		
C	Deadlatch	Option 1: OldCastle - Adams-Rite 4900	Matte alum., satin chrome, or sim.	Incl. cylinder
		Option 2: Kawneer - Adams-Rite 4900		
		Option 3: EFCO - Adams-Rite 4900		
D	Weather strip	Option 1: OldCastle DLO-251 Door Bottom Weatherstrip		
		Option 2: Kawneer Weatherstrip incl.		
		Option 3: EFCO Weatherstrip incl.		
E	Threshold	Option 1: 1/2" HAGER 426S	Aluminum clr. Anodized	
		Option 2: 1/2" Pemko 2549		
		Option 3: 1/2" CRLaurence S19ACL		
F	Lever	Option 1: OldCastle - Adams-Rite 4568	Matte alum., satin chrome, or sim.	
		Option 2: Kawneer - Adams-Rite 4568		
		Option 3: EFCO - Adams-Rite 4568		
G	Surface mtd. door closer. Grade 1	Option 1: HAGER 5100-PAR-14-ALM-HDHO-SLC-LH	Aluminum	
		Option 2: DORMA 8616 PH COV SNB1 626		
		Option 3: LCN 4011 LH ALM MC H TBSRT		
H	Panic Bar + Lever Latch FR90	Option 1: Dorma F95 series YR08M	Satin SS	
		Option 2: Von Duprin 9875L-F		
		Option 3:Stanley FL2308M 4908		

DOOR + DOOR FRAME FINISH KEY

KEY	DESCRIPTION	MANUFACTURER	MODEL / COLOR CODE
DF1	Shop or factory applied paint finish	Option 1: OldCastle - Fluropon	RAL1018
		Option 2: Kawneer - Permafluor	
		Option 3: EFCO - AkzoNobel Ultrapon	
DF2	Grey metallic paint finish	PPG	Duranar XL "Silver Shadow" UC 106707XL

WINDOW SCHEDULE

*ALL WINDOW DIMENSIONS TO BE VIF PRIOR TO ORDERING

WINDOW	TYPE	HEIGHT	WIDTH	THICKNESS	GLAZING MATERIAL	FRAME (SEE KEY BELOW)
W1	A	3'	16'	1"	Insulated Glass	Aluminum

WINDOW KEY

KEY	DESCRIPTION	MANUFACTURER	MODEL/ DESCRIPTION	FRAME FINISH COLOR
A	Ins. Glass Unit w/ air gap w/ Alum. Thermal system	Option 1: OldCastle	Zero Sightline Series 30P w/o vertical post at center (silicone only)	Int Lite: 1/4" Starfire low iron clear Temp. gl. Ext Lite: 1/4" Starfire low iron clear Temp. gl. Frame: Flurospar Black 358X500
		Option 2: Wausau	6250 SUPERWALL SSG w/o plate cover and w/o vertical post at center (silicone only)	Int Lite: 1/4" Starfire low iron clear Temp. gl. Ext Lite: 1/4" Starfire low iron clear Temp. gl. Frame: Linetec Black LT601
		Option 3: EFCO	EFCO - 5600 Fixed Shadowline fixed w/o vertical post at center (silicone only)	Int Lite: 1/4" Starfire low iron clear Temp. gl. Ext Lite: 1/4" Starfire low iron clear Temp. gl. Frame: Ultrapon Black

SKYLIGHT SCHEDULE

*ALL SKYLIGHT DIMENSIONS TO BE VIF PRIOR TO ORDERING

SKYLIGHT	TYPE	HEIGHT	WIDTH	GLAZING MATERIAL	FRAME (SEE KEY BELOW)	NOTES
S1, S2	A	8'	15'-10"	Polycarbonate dome	Aluminum	
S3, S4	A,C	8'	15'-10"	Polycarbonate dome	Aluminum	See Schedules and A-120 / A-122 for location of gravity operated units
S5-S16	A	8'	16'-7"	Polycarbonate dome	Aluminum	
S17, S18	B	8'	15'-10"	Hi-impact modified acrylic	Aluminum	
S19	A	8'	17'-4"	Polycarbonate dome	Aluminum	
S20	B,D	8'	15'-10"	Hi-impact modified acrylic	Aluminum	
S21	A,C	8'	15'-10"	Polycarbonate dome	Aluminum	See Schedules and A-120 / A-122 for location of gravity operated units
S22	B,D	8'	17'-4"	Hi-impact modified acrylic	Aluminum	
S23, S24	A	7'	10'-6"	Polycarbonate dome	Aluminum	

SKYLIGHT KEY

KEY	DESCRIPTION	MANUFACTURER	MODEL/ DESCRIPTION	FRAME FINISH COLOR
A	Typical Skylight	Option 1: Acralight	Cluster model with double dome on 4" curb	Duranar Eclipse Grey (UC106669/5MA86799)
		Option 2: Wasco	Model CL Cluster Skydome with 4" curb	Colonial Gray
		Option 3: Bristolite	Continuous Grid Modular w/ Polycarbonate Domes on 4" curb	Duranar Eclipse Grey (UC106669/5MA86799)
B	Impact Resistant Skylight	Option 1: Acralight	Cluster model with double dome on 4" curb	Duranar Eclipse Grey (UC106669/5MA86799)
		Option 2: Wasco	Model CL Cluster Skydome with 4" curb	Colonial Gray
		Option 3: Bristolite	Continuous Grid Modular w/ Polycarbonate Domes on 4" curb	Duranar Eclipse Grey (UC106669/5MA86799)
C	Gravity Operated Dropout Vent Skylight	Manufacturer: Acralight Dist. 1: Impact PTS Skylights Dist. 2: CBG Assoc. Inc Dist. 3: DAL Associates, LLC	Tandem unit with alum. gravity operated dropout w/ skydome	Duranar Eclipse Grey (UC106669/5MA86799)
D	Impact Resistant and Gravity Operated Dropout Vent Skylight	Manufacturer: Acralight Dist. 1: Impact PTS Skylights Dist. 2: CBG Assoc. Inc Dist. 3: DAL Associates, LLC	Tandem unit with alum. gravity operated dropout w/ skydome	Duranar Eclipse Grey (UC106669/5MA86799)

EXTERIOR FINISH SCHEDULE

LOCATION	DESCRIPTION	MANUFACTURER	COLOR/FINISH KEY	ADDITIONAL NOTES
MONITORING BOOTH				
Porch + Stair + Conc. Curb	Exposed concrete		C1	
Exterior Tiles	Porcelain Tiles (freeze / thaw resistant)	Manuf. TopCer Dist 1: Nemotile Dist 2: Genesee Ceramic Tile Dist 3: Mees Distributors	T1+T2	w/ exterior grade, UV resistant, penetrating sealant. See A-501 for tile layout.
Corrugated Metal	Aluminum	Option 1: Corrugated Metals, Inc. 1/4" Corrugated Siding	P1	
		Option 2: Fabral, 1/4" Corrugated Siding	P1	
		Option 3: Metal Roofing Source, 1/4" Corrugated Siding	P1	
Metall Bollard on Diesel Station and Monitoring Booth	Stainless Steel		SS	See dwg. X-112
Metal Curb on Concrete Island	Stainless Steel Curb	Option 1: Formex	SS	
		Option 2: Riverside Steel	SS	
		Option 3: Baker Industries Northwest	SS	
Fascia	Aluminum		P1	
Coping, Tile trims	Stainless Steel		SS	
Exterior Handrail	Galv. Steel	Manuf. Wagner Dist. 1: Mid City Steel Corp. Dist. 2: Ping Ping Products Corp. Dist. 3: DJA Imports, Ltd.		
Rainspout	Stainless Steel			
Membrane Roofing	White EPDM roofing	Option 1: Carlisle-Syntec	Sure-white	
		Option 2: Firestone	Eco White	
		Option 3: Versico	Versigard White	
M+R BUILDING				
Membrane Roofing	EPDM roofing	Option 1: Carlisle-Syntec; Sure tough reinforced EPDM	Black	
		Option 2: Firestone; Rubber guard EPDM	Black	
		Option 3: Versico; Versigard	Black	
Asphalt Roofing (replace in kind)	Asphalt shingles	Option 1: GAF Roofing	Color + spec. to match exist.	
		Option 2: CertainTeed	Color + spec. to match exist.	
		Option 3: Atlas Roofing	Color + spec. to match exist.	
Flashing and coping	Stainless Steel			
Bricks	Replacement bricks- identify brick and match existing			

EXTERIOR COLOR SCHEDULE KEY

KEY	COLOR DESCRIPTION
T1	TopCer Black, 7.5cm x 15cm, Grout color - T.B.D.
T2	TopCer White, 7.5cm x 15cm, Grout color - T.B.D.
P1	Shop or factory spray painted w/ PPG Industries,Corafion ADS Intermix, AD3C1016N, Yellow, Satin sheen
C1	Scofield Chromix Charcoal C-24 with liquid sealer / densifier

CUSTOM MILLWORK SCHEDULE

LOCATION / ITEM	MATERIAL	COLOR/ FINISH	NOTES
Monitoring Booth-Desk	Quartersawn Red Oak veneer on ply + solid Oak trim at edge to match veneer	3 coats clear poly, satin finish	See A-504

MILLWORK FINISH HARDWARE SCHEDULE

LOCATION / ITEM	MANUFACTURER	MODEL NAME / NO.	FINISH
Brackets	Option 1: Rakks	EH1818 SS	
	Option 2: Federal Brace	Streamline Counter Top Bracket 18x18 SS	
	Option 3: ACP	Streamline Bracket 18x18 SS	

MONITORING BOOTH FURNITURE SCHEDULE

LOCATION / ITEM	MANUFACTURER	MODEL NAME / NO.	FINISH
Metal shelves	Option 1: HON	Brigade HS42ABCP	Black
	Option 2: Sandusky	Elite Welded Bookcase BA20361242-09	Black
	Option 3: Global Industrial	All Steel WG277440BK	Black

ELECTRICAL & LIGHTING FIXTURES SCHEDULE

LOCATION	TYPE	MANUFACTURER/ MODEL NO.	FINISH / NOTE
FUELING STATION	LED Cobra	Manuf.: BetaLED / LEDway Streetlight - Type 5 Medium Dist 1: Stan Deutsch Associates Dist 2: Ferrini & Knoarski Dist 3: Penn Lighting	
	Light Pole	Manuf. Millerbernd. Model: 20' TSLP-E traffic light pole with 6' twin arm and Steel "T" base Dist 1: Spectrolume, NY Dist 2: Spec lines, MA Dist 3: Lighting Systems, CT	Hot Dipped Galvanized; see X-113
MONITORING BOOTH	Interior ceiling mounted recessed LED fixture	Manufacturer: LED Neoray S22DR-1L35-STG-4D-1ED-S92HT Dist. 1: YB Lighting Dist. 2: AVON Lighting Dist. 3: Enterprise Lighting	White
	Exterior wall mounted LED fixture	Manufacturer: Lumenbeam medium Dist.1: International Lights Dist. 2: Quality Lighting Dist. 3: Lighting Affiliates	Die cast alum.
	Exterior motion sensor switch	Manufacturer: WattStopper EW-205-24 Dist. 1: Conserve Electrical Supply Corp. Dist. 2: I.G. Federal Electric Supply Dist. 3: Liberty Electrical Supplies	
M&R BUILDING	Standard Fluorescent Strip	Option 1: Legion/ Microstrip T5 Series 1600	White
		Option 2: Delray/ST5	White
		Option 3: American Fluorescent/T5 Low Profile	White
MONITORING BOOTH / M&R BUILDING	Interior light switch	Option 1: Leviton Decora Style	White
		Option 2: Lutron Diva	White
		Option 3: Siemens Delta	White

INTERIOR FINISH SCHEDULE

LOCATION	DESCRIPTION	MANUFACTURER	COLOR/FINISH KEY	ADDITIONAL NOTES
M+R Elec. Rm. Stair Tread	Pre-fab bar grille treads	Option 1: MC NICHOLS GW	Galvanized Stl. w/clear finish	See A-401 for stair details.
		Option 2: OHIO GRATINGS	Galvanized Stl. w/clear finish	See A-401 for stair details.
		Option 3: AMICO GRATING welded plain 1-1/2" x 3/16" bearing bars 1-3/16" O.C. x 4' w/ checkered plate nosing	Galvanized Stl. w/clear finish	See A-401 for stair details.
M+R Elec. Rm. Stair rail and stringer	Welded stl. tubes + channels, hot dip galvanized		Galvanized Stl. w/clear finish	See A-401 for stair details.

LOCATION	FLOOR	CLNG	WALLS	BSBD	ADDITIONAL NOTES
MONITORING BOOTH	C2	W1	W1	B1	3 coats clear poly, satin finish on both walls and ceiling
M+R BUILDING: ELECTRICAL ROOM	C1	Exist.	P2	Exist.	
M+R BUILDING: TRUCK REPAIR ROOM	C3	Exist.	Exist.	Exist.	

INTERIOR COLOR SCHEDULE KEY

KEY	COLOR DESCRIPTION
C2	Polished concrete: Scofield Chromix Charcoal C-24 with liquid sealer / densifier
C3	Self-leveling concrete grey: see 033000 cast-in-place concrete, M&R Building
W1	Quartersawn Red Oak veneer on 1/2" ply
B1	Vinyl baseboard: Armstrong, grey to match C2 concrete
P2	CMU Block, ptd.: Benjamin Moore "Icicle" OC-60, Eggshell

NEW YORK CITY DEPARTMENT OF
DESIGN + CONSTRUCTION
DIVISION OF STRUCTURES
BUREAU OF ARCHITECTURE
& ENGINEERING

PROJECT NAME:
HARPER ST. YARD

32-11 HARPER STREET,
QUEENS, NY 11368
CAPITAL PROJECT NUMBER
HWQF027C

Architect:
nARCHITECTS, PLLC
68 JAY #317
BROOKLYN, NY 11201
T: 718.260.0845 F: 718.260.0847

MEP Engineer:
PLUS GROUP
231 WEST 29th STREET, RM. 706
NEW YORK, NY 10001
T: 212.233.2700 F: 212.233.2727

Structural Engineer:
ROBERT SILMAN ASSOCIATES
88 UNIVERSITY PLACE
NEW YORK, NY 10003
T: 212.620.7970 F: 212.620.8157

Environmental & Fuel Consultant:
URS
77 GOODELL STREET
BUFFALO, NY 14203
T: 716.856.5636 F: 716.856.2545

Code Consultant:
J CALLAHAN CONSULTING INC.
299 BROADWAY SUITE 1420
NEW YORK, NY 10007
T: 212.766.2115 F: 212.766.2787

Date:	Issue:
05.19.10	75% SD
06.02.10	80% SD
11.17.10	100% Schematic Design
02.09.11	100% Design Dev.
04.06.11	75% CD
03.07.12	100% CD
06.06.12	100% CD - Revised
10.12.12	**Bid Set**

Sheet title:
SCHEDULES

Scale: N.T.S.

Seal and Signature:

Date: 09.28.12
Project No.: 0902
Dwg By: MP
Chk By: MH

Dwg No:
G-001.00

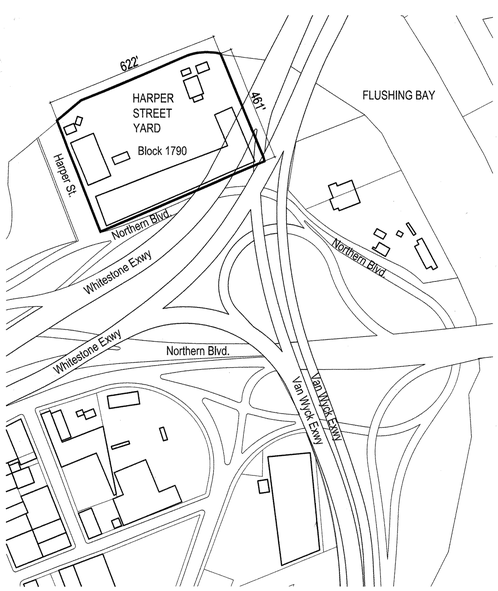

1 PLOT PLAN
1" = 250'

N

NOTES

General Notes:

1. Scope of Work: File related architectural, structural, and mechanical work. New Certificate of Occupancy for the monitoring booth to be obtained under NB application.
2. All work shall conform to the requirements of the New York City Building Code, Fire Department regulations, utility company requirements, and the best trade practices.
3. Before commencing work, the Contractor shall file all required Certificates of Insurance with the Department of Buildings, obtain all required permits, and pay all fees required by governing New York City agencies.
4. The Contractor shall verify all existing conditions in the field prior to commencing work, and shall report any discrepancies between drawings and field conditions to the Architect.
5. Minor details not usually shown or specified, but necessary for proper construction of any part of the work shall be included as if they were indicated in the drawings.
6. The Contractor shall coordinate all work procedures with requirements of local authorities and building management.
7. The Contractor shall be responsible for the protection of all conditions and materials within the proposed construction area. The Contractor shall design and install adequate shoring and bracing for all structural or removal tasks. The Contractor shall have sole responsibility for any damage or injuries caused by or during the execution of the work.
8. The Contractor shall lay out his own work, and shall provide all dimensions required for other trades (plumbing, electrical, etc.).
9. Plumbing and electrical work shall be performed by persons licensed in their trades, who shall arrange for and obtain inspections and required sign_offs.
10. The Contractor shall do all cutting, patching, repairing as required to perform all of the work indicated on the drawings, and all other work that may be required to complete the job.
11. All piping and wiring shall be removed to a point of concealment and shall be properly capped or plugged.

FINISHES AND DETAILS

1. Interior finishes shall be classified in accordance with surface flame spread ratings (per RS 5-5) and shall be used in accordance with Table 5-4, 27-348.
2. No interior finish material covering more than 20% of the aggregate wall and ceiling area, shall be used if it develops smoke in greater density than the rating shown in the table 27-348(d).
3. Attachment and adhesives for interior finish to have the same Flame-Spread, and Smoke Developed Rating of the interior finishes, as per 27-348(f).
4. No material shall be used in any interior location which will produce products more toxic than those given off by wood or paper when decomposing or burning as per 27-348(e).
5. Coatings applied by brush or spray shall not be used as flame-spread retardants excepts as provided for In 27-349.
6. For construction group I, combustible flooring may be used when in compliance with 27-351(b).
7. Floors in required exits shall not have any carpet. Only wool carpeting may be installed in lobby areas, exit passageways, and convenience stairs, as per 27-351(d)(1).
8. Carpet, when used as a floor covering, shall have flammability requirements In accordance with RS 5-20. If used as an interior finish, to comply with provisions regarding interior finishes per 27-348.
9. All glass panels, used in windows, in doors, as interior partitions, etc. shall be in compliance with 27-643, and RS 10-68. Thickness, maximum glass panel area, strength, etc., of glass panel shall be In accordance with Tables 10-6, 10-7, 10-8, 10-9, of 27-643.
10. In fireproof buildings, Except for miscellaneous trims, moldings, etc. All wood used shall be fire-retardant, i.e., counter tops, cabinets, doors, etc.
11. In high hazard occupancy, and in all exits except those in buildings of construction group II-E, finish flooring shall be noncombustible except as otherwise provided for stairs in section 27-375(h).

STRUCTURAL STABILITY

a. The controlled inspection architect or engineer shall retain a copy of the documents described in Section 16-01 (b) of the Promulgation of the Rules Relating to the Controlled Inspection of the Stability and Integrity of Existing Structures during Construction Operations in his or her office and shall provide a copy to the contractor and/or owner to be kept at the construction site.
b. The controlled inspection architect or engineer shall determine the frequency of inspections needed and whether he or she should inspect the site personally or send a person under his or her direct supervision. At a minimum, the site must be inspected twice, once at a pre-construction meeting with the contractor and once during construction operations.
c. The controlled inspection architect or engineer, for each job which requires the submission of a TR-1 pursuant to Section 16-01 (a) (ii), shall maintain a log in his or her office which will include the required information as noted in the Promulgation of the Rules Relating to the Controlled Inspection of the Stability and Integrity of Existing Structures during Construction Operations.
d. The controlled inspection architect or engineer responsible for controlled inspection shall report unsafe conditions to the Department of Buildings and/or any other affected parties or agencies.
e. Upon request of the Department, the controlled inspection architect or engineer shall make available for available for review by the Department documents described in Section 16-01(b) and the log described in Section 16-01 (e).

EGRESS NOTES

1. Exit and access requirements are to be calculated as per Table 6-1 as per C27-357.
2. All exits shall be kept readily accessible and unobstructed at all times.
3. Finish flooring in all exits shall be of noncombustible materials as per C27-351.
4. Doors are to comply with all applicable requirements of C27-371, including the following:

a. Doors for required exits are to be self-closing with a 1 1/2 hour fire protection rating, except that exterior street floor exit doors having an exterior separation of more than 15' need not be fire protected and doors into stairs and exit passageways shall have a minimum fire protection rating of 3/4 hour.
b. Door jambs or stops and the door thickness which open is not to reduce the required width by more than 3" for each 22" of width. Door opening to all habitable and occupied rooms is to minimum 32".
c. All exit doors are to open in the direction of egress.
d. Floor levels on both sides of all exit and corridor doors are to be level and at the same elevation for a distance at least equal to the width of the door.
e. Exit doors shall be readily openable at all times from the side from which egress is to be made. Doors opening onto interior enclosed stairs shall not be locked from either side except that doors may be locked to prevent access to the stair from the outside at street level.

5. Interior stairs are to comply with all applicable requirements of C27-375 and Table 6-4, including the following:

a. The clear headroom is to be at least 7' minimum, except that in buildings classified in Occupancy Groups J-2 and J-3, the minimum clear headroom may be 6'-8".
b. Landing and platforms provided at the head and foot of each flight of stairs are to have a minimum width, perpendicular to the direction of travel, of at least the width of the stair. In straight-run stairs, the distance between risers of upper and lower flights need not be more than 44". Landing and platforms are to be enclosed by walls, grills, or guards, at least 3' high.
c. The maximum vertical rise of a single flight of stair between floors is not to exceed 12' except in Occupancy Groups F and H, where the vertical rise is not to exceed 8'. No flight of stairs is to have less than two risers.
d. Risers shall be maximum 7 3/4" high, treads a minimum of 9 1/2" wide exclusive of nosing. The sum of two risers plus one tread is not to be less than 24" nor more than 25.5". Riser height and tread width shall be constant in any flight of stairs from story to story.
e. Stairs shall have handrails on each side, except that stairs less than 44 inches wide may have a handrail on one side only. Handrails shall provide a finger clearance of 1 1/2" and shall project not more than 3 1/2" into required stair width. Stairs of more than 88 inches shall have intermediate handrails. Height of handrails shall be between 30 and 34 inches above the thread nosing. Handrails shall be returned to walls and posts at their termination. Materials of handrails shall have a flamespread rating not exceeding 150.
f. Risers, treads, stringers, landings, platforms, and guards, exclusive of handrails, shall be built of noncombustible materials. When two stairs are contained within the same enclosure, each stair shall be separated from the other by noncombustible construction having a fire resistance rating equal to that required for the stair enclosure. Stairs, platforms and landings shall be designed to support all loads as per C27-550. Tread and landings shall be built of or surfaced with nonskid materials.

6. Exit Passageways are to comply with all applicable requirements of C27-370 and Table 6-1, including the following:

a. Exit passageways shall be maintained clear of obstructions at all times. Not more than fifty percent of the total number of vertical exits provided for a building may be served by a single exit passageway, except in the case of a street floor lobby. One hundred percent of the of the total number of vertical exits may be served by a street floor lobby, if egress is provided in two different directions from the discharge points of all vertical exits to open exterior spaces that are remote from each other.
b. Exit passageways are to have a clear height of 7'-6" for at least 75% of floor area, with no point less than 7'-0" in height. No projection below the ceiling is to be located so as to obstruct full view of exit signs.
c. All exits and their access facilities shall be equipped with adequate artificial lighting (minimum of 5 foot candles at floor level), in continuous operation, in compliance with C27-381. Exit lighting shall be connected to an emergency power source or to storage battery equipment that is approved by the Bureau of Electrical Control.
7. BS&A approved type illuminated exit signs are to be provided as required, per C27-383. Location of every exit on every floor shall be clearly indicated by exit signs. Directional signs are to be installed to serve as a guide from all portions of the corridor or floor. Exit signage shall be connected to an emergency power source or to storage battery equipment that is approved by the Bureau of Electrical Control. Signs shall be internally lighted, having an initial brightness of letters of at least 25 feet Lambert.

TENANT PROTECTION PLAN §28-104.8.4

Construction documents for alterations of buildings in which any dwelling unit will be occupied during construction shall include a tenant protection plan. Such plan shall contain a statement that the building contains dwelling units that will be occupied during construction and shall indicate in sufficient detail the specific units that are or may be occupied during construction, the means and methods to be employed to safeguard the safety and health of the occupants, including, where applicable, details such as temporary fire-rated assemblies, opening protectives, or dust containment procedures. The elements of the tenant protection plan may vary depending on the nature and scope of the work but at a minimum shall make detailed and specific provisions for:

1. Egress. At all times in the course of construction provision shall be made for adequate egress as required by this code and the tenant protection plan shall identify the egress that will be provided. Required egress shall not be obstructed at any time except where approved by the commissioner.

2. Fire safety. All necessary laws and controls, including those with respect to occupied dwellings, as well as additional safety measures necessitated by the construction shall be strictly observed.

3. Health requirements. Specification of methods to be used for control of dust, disposal of construction debris, pest control and maintenance of sanitary facilities, and limitation of noise to acceptable levels shall be included.

3.1. There shall be included a statement of compliance with applicable provisions of law relating to lead and asbestos.

5. Structural safety. No structural work shall be done that may endanger the occupants.

6. Noise restrictions. Where hours of the day or the days of the week in which construction work may be undertaken are limited pursuant to the New York city noise control code, such limitations shall be stated.

SPECIAL INSPECTIONS

1. Inspection of selected materials, equipment, installation, fabrication, erection or placement of components and connections made during the progress of the Work to ensure compliance with the Contract Documents and provisions of the New York City Construction Codes, shall be made by a Special Inspector. The City of New York will retain the services of the Special Inspector and bear the costs for the performance of Special Inspections in compliance with NYC Construction Codes requirements or as additionally may be called for in the project specifications, except as noted below for Form TR-3: Technical Report for Concrete Design Mix. The Special Inspector shall be an entity compliant with the requirements of the New York City Construction Codes.

2.Form TR3: Technical Report Concrete Design Mix: The contractor shall be responsible for, and bear all costs associated with the filing and securing of approvals, if any, for Form TR3: Technical Report Concrete Design Mix, including, but not limited to, engaging the services of a New York City licensed Concrete Testing Lab for the review and approval of concrete design mix, testing, signatures and professional seals, etc., compliant with NYC Department of Buildings requirements, for each concrete design mix.

3. The Contractor shall notify the relevant Special Inspector in writing at least 72 hours before the commencement of any work requiring Special Inspection. The contractor shall be responsible for, and bear related costs to assure that all construction or work shall remain accessible and exposed for inspection purposes until the required inspection is completed.

4. Inspections and tests performed under "Special Inspection" shall not relieve the Contractor of the responsibility to comply with The Contract Documents, and that there is no warranty given to the Contractor by the City of New York in connection with such Inspection and tests or certifications made under "Special Inspections".

5. The contractor must coordinate with the Resident Engineer or DDC Project Manager to provide access and schedule the work for inspection by the Special Inspector.

EXIT SIGNS AND LIGHTING NOTES

1. As indicated and located on the plan, exit signs shall be at least 8 inches high with strokes at least 3/4 inch wide, complying with all the requirements of C27-383 and C27-541.

2. Signs shall be of the internally lighted type where the general illumination is reduced to less than 5-foot candles during a performance or during occupancy. Signs shall be lighted at all times during occupancy, and shall be clearly visible from all parts of the assembly space, per C27-541.

3. Corridors and exits to be provided with artificial lighting facilities, supplying at least two foot candles measured at the floor level, to be maintained continuously in exits and their access facilities for their full length, per C27-381.

4. The location of every exit on every floor shall be clearly indicated by BS&A approved type exit signs, per C27-383.

5. Exit lighting and exit signs shall be connected to an emergency power source or to storage battery equipment meeting the requirements of the Bureau of Electrical Control, provided that in existing buildings they may be on circuits that are separate from the general lighting and power circuits, taken off ahead of the main switch, per C27-382 and C27-384.

PLUMBING AND DRAINAGE NOTES

1. All plumbing and gas piping work shall be installed in strict accordance with the requirements of NYC Plumbing Code (2008).
2. Plumbing fixtures shall be of type and manufacture approved for use in New York City, and shall bear BS&A/MEA approval, or other accepted approved agency (NYC Construction Code, 2008).
3. Local Law 29/89: All plumbing fixtures shall meet water saving performance standards specified in Subdivision P.104.2 of Sec P. 104.0 Reference Standard RS 16 NYCBC.
4. All gas_fired equipment to be AGA or MEA approved.
5. Plumbing contractor to examine proposed layout with regard to existing field conditions, and shall notify architect of any discrepancies between assumed field conditions and those encountered during construction. Plumbing contractor shall inform Architect of any revisions to plan which shall be necessary, based on conditions uncovered in the field, in order to install all fixtures, equipment and piping in strict accordance with the requirements of the NYC Construction Code.
6. Plumbing contractor shall arrange and obtain inspections and required sign_offs.

DOB APPROVALS

Contractor should file all required documents to get theDOB approval for demolition work.
This project is filed under a New Building , ALT-2 and Demolition application.

NOTE: This plan is approved only for work approved on the application specification sheet. All other matters shown are not to be relied upon, or to be considered as either approved or in accordance with applicable codes.

SPECIAL INSPECTIONS

DIESEL PUMP STATION AND MONITORING BOOTH NB APPLICATION

Flood Zone Compliance
Structural Steel
Structural Steel Erection & Bolting
Concrete Cast-in-Place
Soils-Site Preparation
Soils- Fill Placement & In place density
Pile Fountaion & Drille Pier Inst.
Pier Foundation
Mech. Systems
Fuel-oil Storage and Fuel oil piping sys
Structural Safety - Structuras stability
Excavation - Sheeting, shoring and bracing
Heating Systems
Concrete Test Cylinders
Concrete Design Mix

MAINTENANCE & REPAIR BUILDING ALT-2 APPLICATION

Flood Zone Compliance
Structural Steel - Welding
Structural Steel - Erection & Bolting
Concrete Cast in Place
Masonry
Structural Safety - Structural Stability
Concrete Test Cylinders
Concrete Design Mix

DEMOLITION APPLICATION

Mechanical Demolition

PROGRESS INSPECTIONS

DIESEL PUMP STATION AND MONITORING BOOTH NB APPLICATION

Energy Code Compliance Inspections
- Protection of foundation insulation
- Insulation placement and R values
- Fenestration thermal values and ratings
- Fenestration rating for air leakage
- Fenestration Areas
- Air Sealing and insulation - visual
- Air Sealing and insulation testing
- Loading deck weather seals
- HVAC and service water heating system controls
- Interior lighting power
- Exterior lighting power
- Lighting controls
- Maintenance information

Fire Resistant Rated Construction
Final

MAINTENANCE & REPAIR BUILDING ALT-2 APPLICATION

Energy Code Compliance Inspections
- Fenestration thermal values and ratings
- Air Sealing and insulation - visual

Final

AREA CALCULATIONS

MAINTENANCE & REPAIR BUILDING

BUILDING GROSS AREA

GROUND FLOOR	62,169 sq. ft.
ROOF	65,639 sq. ft.
TOTAL	127,808 sq. ft.

BUILDING NET AREA

GROUND FLOOR	59,798 sq. ft.
ROOF	63,823 sq. ft.
TOTAL	123,621 sq. ft.

DEMOLITION AREA

GROUND FLOOR	27,322 sq. ft.
ROOF	3,692 sq. ft.
TOTAL	31,014 sq. ft.

RENOVATIONS GROSS AREA

GROUND FLOOR	28,137 sq. ft.
ROOF	3,692 sq. ft.
TOTAL	31,829 sq. ft.

RENOVATIONS NET AREA

GROUND FLOOR	27,322 sq. ft.
ROOF	3,692 sq. ft.
TOTAL	31,014 sq. ft.

NEW DIESEL STATION & MONITORING BOOTH

BUILDING GROSS AREA

GROUND FLOOR	765 sq. ft.
ROOF	324 sq. ft.
TOTAL	1,089 sq. ft.

BUILDING NET AREA

GROUND FLOOR	720 sq. ft.
ROOF	324 sq. ft.
TOTAL	1,044 sq. ft.

BOILER PLANT & EXISTING DIESEL STATION

BUILDING GROSS AREA

GROUND FLOOR	10,573 sq. ft.
ROOF	4,973 sq. ft.
TOTAL	15,546 sq. ft.

BUILDING NET AREA

GROUND FLOOR	9,693 sq. ft.
ROOF	4,465 sq. ft.
TOTAL	14,158 sq. ft.

DEMOLITION AREA

GROUND FLOOR	10,573 sq. ft.
ROOF	4,973 sq. ft.
TOTAL	15,546 sq. ft.

DRAWING SYMBOLS

- D1 — DOOR NUMBER
- W1 — WINDOW NUMBER
- + 1000 — ELEVATION FLOOR LEVEL
- SECTION SYMBOL — DRAWING NUMBER / SHEET NUMBER
- ELEVATION SYMBOL — DRAWING NUMBER / SHEET NUMBER
- DETAIL SYMBOL — DRAWING NUMBER / SHEET NUMBER

ARCHITECTURAL ABBREVIATIONS

ACC	AIR COOL CONDENSING UNIT	MAX.	MAXIMUM
AFF	AT FINISH FLOOR	MECH	MECHANICAL
AHU	AIR HANDLER UNIT	MIN	MINIMUM
A.L.	ACOUSTICAL LINING	MTD.	MOUNTED
ALIGN	ALIGN TO SAME LEVEL / LOCATION	NO.	NUMBER
		NTS	NOT TO SCALE
APPROX	APPROXIMATELY	QTY	QUANTITY
CD	CEILING DIFFUSER	REC'D	RECESSED
CLNG	CEILING	RD	ROOF DRAIN
COL	COLUMN	REF	REFERENCE
CONC	CONCRETE	REQD	REQUIRED
DIM	DIMENSION	SECT	SECTION
Ø	DIAMETER	SHT	SHEET
DN	DOWN	SIM	SIMILAR
ELEC	ELECTRICAL	STD	STANDARD
EL	ELEVATION	T.O.C.	TOP OF CONCRETE
EQ.	EQUAL	TX	TOILET EXHAUST
EXT.	EXTERIOR	TYP.	TYPICAL GENERAL CONDITION
FD	FLOOR DRAIN		
FIN	FINISHED	VIF	VERIFY IN FIELD
FL	FLOOR	VD	VOLUME DAMPER
GWB	GYPSUM WALLBOARD	UP	UP
H.M.	HOLLOW METAL	W /	WITH
KX	KITCHEN EXHAUST	W / O	WITHOUT
LBD	LINEAR BAR DIFFUSER		
LBR	LINEAR BAR RETURN REGISTER		

SITE INFORMATION

LEGAL ADDRESS	32-11 Harper Street, Borough of Queens, City of New York
BLOCK	1790
LOT	1
ZONING MAP	10A
ZONING DISTRICT	M3-1
ZONING USE GROUP	18
BUILDING HEIGHT	37'-4"
NO. OF STORIES	1 Floor above grade
C.B. NO.	407
CONSTRUCTION CLASS	
EXISTING CERTIFICATE OF OCCUPANCY	None
BUILDING SPRINKLERED	No
BUILDING OCCUPANCY	F1

DRAWING SCHEDULE

SHEET NO.	TITLE
G-000	COVER SHEET
G-001	SCHEDULES
	HARPER ST. YARD TOPOGRAPHICAL MAP 1 OF 2
	HARPER ST. YARD TOPOGRAPHICAL MAP 2 OF 2
	HARPER ST. YARD MER BUILDING
A-000	PROPOSED SITE PLAN
ASBESTOS ABATEMENT:	
H-001	ASBESTOS & HAZARDOUS MATERIALS ABATEMENT SITE PLAN
H-002	ASBESTOS & HAZARDOUS MATERIALS ABATEMENT SITE PLAN
H-003	ABATEMENT PLAN PARTIAL PLAN "A & B"
ARCHITECTURAL:	
DM-100	DEMOLITION FIRST FLOOR PARTIAL PLAN "A"
DM-101	DEMOLITION FIRST FLOOR PARTIAL PLAN "B"
DM-102	DEMOLITION FIRST FLOOR PARTIAL PLAN "C"
DM-120	DEMOLITION ROOF PARTIAL PLAN "A"
DM-121	DEMOLITION ROOF PARTIAL PLAN "B"
DM-122	DEMOLITION ROOF PARTIAL PLAN "C"
DM-123	DEMOLITION ROOF PARTIAL PLAN "D"
A-001	CONCRETE PHASING PLAN PARTIAL PLAN "A & B"
A-100	FIRST FLOOR PARTIAL PLAN "A"
A-101	FIRST FLOOR PARTIAL PLAN "B"
A-102	FIRST FLOOR PARTIAL PLAN "C"
A-103	FIRST FLOOR PARTIAL PLAN "E"
A-110	REFLECTED CEILING PLAN - FIRST FLOOR PARTIAL PLAN "A"
A-111	REFLECTED CEILING PLAN - FIRST FLOOR PARTIAL PLAN "B"
A-112	REFLECTED CEILING PLAN - FIRST FLOOR PARTIAL PLAN "C"
A-120	ROOF PARTIAL PLAN "A"
A-121	ROOF PARTIAL PLAN "B"
A-122	ROOF PARTIAL PLAN "C"
A-123	ROOF PARTIAL PLAN "D"
DM-201	DEMOLITION SOUTH ELEVATION
DM-202	DEMOLITION NORTH ELEVATION
DM-203	DEMOLITION EAST & WEST ELEVATIONS
A-201	SOUTH ELEVATION
A-202	NORTH ELEVATION
A-203	EAST & WEST ELEVATIONS, CROSS SECTION
A-301	NORTH BUILDING SECTION
A-302	SOUTH BUILDING SECTION
A-400	MAINTENANCE & REPAIR BUILDING DETAILS
A-401	MAINTENANCE & REPAIR BUILDING DETAILS
A-500	FIRST FLOOR ENLARGENED PARTIAL PLAN "E"
A-501	ELEVATIONS AND AXONOMETRIC
A-502	BUILDING SECTIONS
A-503	INTERIOR ELEVATIONS
A-504	PLAN AND SECTION DETAILS
A-505	PLAN AND SECTION DETAILS

DRAWING SCHEDULE (CONTINUED)

SHEET NO.	TITLE
STRUCTURAL:	
S-100	GROUND FLOOR PARTIAL FRAMING PLAN "A"
S-101	GROUND FLOOR PARTIAL FRAMING PLAN "B"
S-102	GROUND FLOOR PARTIAL FRAMING PLAN "C"
S-104	MONITORING BOOTH FRAMING PLAN
S-120	LOW & HIGH ROOF PARTIAL FRAMING PLAN "A"
S-121	LOW & HIGH ROOF PARTIAL FRAMING PLAN "B"
S-122	LOW & HIGH ROOF PARTIAL FRAMING PLAN "C"
S-123	FLAT ROOF LOADING PLAN
S-200	GENERAL NOTES & TYPICAL DETAILS
S-201	LOAD SCHEDULES REBAR TABLES & TYPICAL DETAILS
S-300	SECTIONS
ENVIRONMENTAL & FUEL:	
DM-300	LEGEND AND ABBREVIATIONS
DM-301	EXISTING CONDITIONS PLAN
DM-302	GENERAL SITE DEMOLITION PLAN
DM-303	DETAILED SITE DEMOLITION PLAN
DM-304	SITE PHOTOS
DM-305	SITE PHOTOS
DM-306	EROSION & SEDIMENT CONTROL PLAN
DM-307	EROSION & SEDIMENT CONTROL DETAILS
DM-308	PROPOSED RESTORATION PLAN
DM-309	EROSION & SEDIMENT CONTROL NOTES & DETAILS
ENVIRONMENTAL & FUEL:	
X-100	LEGEND, ABBREVIATIONS & GENERAL NOTES
X-101	NOTES
X-102	TANK REMOVAL AND INSTALLATION NOTES
X-103	FUEL SYSTEM NOTES
X-104	EXISTING CONDITIONS PLAN
X-105	TANK DEMOLITION AND EXCAVATION PLAN
X-106	PROPOSED DIESEL FUELING SYSTEM AND MONITORING BUILDING
X-107	PROPOSED DIESEL FUELING SYSTEM AND MONITORING BUILDING
X-108	NEW DIESEL TANK SYSTEM PLAN VIEW
X-109	NEW UNDERGROUND STORAGE TANK SYSTEM CROSS SECTIONS
X-110	NEW UNDERGROUND STORAGE TANK SYSTEM CROSS SECTIONS
X-111	FUEL DISPENSING ISLAND PLAN AND CROSS SECTION
X-112	MISCELLANEOUS DETAILS
X-113	MISCELLANEOUS DETAILS
X-114	MISCELLANEOUS DETAILS
X-115	EROSION AND SEDIMENT CONTROL PLAN
X-116	EROSION AND SEDIMENT CONTROL DETAILS
X-117	EROSION AND SEDIMENT CONTROL DETAILS
X-118	PROPOSED RESTORATION PLAN
X-119	RESTORATION DETAILS

DRAWING SCHEDULE (CONTINUED)

SHEET NO.	TITLE
MECHANICAL:	
M-001	MECH. SYMBOLS, ABBREVIATIONS, SCHEDULES & GRAL. NOTES
M-100	FIRST FLOOR MECHANICAL PARTIAL PLAN "E"
M-101	FIRST FLOOR MECHANICAL PARTIAL PLAN "A"
M-102	FIRST FLOOR MECHANICAL PARTIAL PLAN "B"
M-103	FIRST FLOOR MECHANICAL PARTIAL PLAN "C&D"
ENERGY COMPLIANCE:	
EN-001.00	ENVELOPE ENERGY CODE COMPLIANCE SHEET
EN-002.00	ENERGY CODE COMPLIANCE SHEET
ELECTRICAL:	
E-001	ELECTRICAL SYMBOLS AND ABBREVIATIONS
E-002	ELECTRICAL GENERAL NOTES
E-100	FIRST FLOOR ELECTRICAL PARTIAL PLAN "E"
E-101	FIRST FLOOR ELECTRICAL PARTIAL PLAN "A"
E-102	FIRST FLOOR ELECTRICAL PARTIAL PLAN "B"
E-103	FIRST FLOOR ELECTRICAL PARTIAL PLAN "C"
E-104	FIRST FLOOR ELECTRICAL PARTIAL PLAN "D"
E-105	FOOT CANDLE CALCULATIONS
E-300	ELECTRICAL ONE LINE DIAGRAM
E-400	EXISTING ELECTRICAL PANELS SHEET 1
E-401	EXISTING ELECTRICAL PANELS SHEET 2
E-402	EXISTING ELECTRICAL PANELS SHEET 3
E-403	EQUIPMENT SCHEDULE AND DETAIL SHEET
PLUMBING:	
P-001	PLUMBING LEGEND & PLOT PLAN
P-101	FIRST FLOOR PLUMBING PARTIAL PLAN "A"
P-102	FIRST FLOOR PLUMBING PARTIAL PLAN "B"
P-103	FIRST FLOOR PLUMBING PARTIAL PLAN "C"
P-104	FIRST FLOOR PLUMBING PARTIAL PLAN "D"
P-121	ROOF PLUMBING PARTIAL PLAN "A"
P-122	ROOF PLUMBING PARTIAL PLAN "B"
P-123	ROOF PLUMBING PARTIAL PLAN "C"
P-200	STORM WATER RISER DIAGRAM

NEW YORK CITY DEPARTMENT OF DESIGN + CONSTRUCTION
DIVISION OF STRUCTURES
BUREAU OF ARCHITECTURE & ENGINEERING

PROJECT NAME:
HARPER ST. YARD

32-11 HARPER STREET,
QUEENS, NY 11368
CAPITAL PROJECT NUMBER
HWQF027C

Architect:
nARCHITECTS, PLLC
68 JAY #317
BROOKLYN, NY 11201
T: 718.260.0845 F: 718.260.0847

MEP Engineer:
PLUS GROUP
231 WEST 29th STREET, RM. 706
NEW YORK, NY 10001
T: 212.233.2700 F: 212.233.2727

Structural Engineer:
ROBERT SILMAN ASSOCIATES
88 UNIVERSITY PLACE
NEW YORK, NY 10003
T: 212.620.7970 F: 212.620.8157

Environmental & Fuel Consultant:
URS
77 GOODELL STREET
BUFFALO, NY 14203
T: 716.856.5636 F: 716.856.2545

Code Consultant:
J CALLAHAN CONSULTING INC.
299 BROADWAY SUITE 1420
NEW YORK, NY 10007
T: 212.766.2115 F: 212.766.2787

Date:	Issue:
05.19.10	75% SD
06.02.10	80% SD
11.17.10	100% Schematic Design
02.09.11	100% Design Dev.
04.06.11	75% CD
03.07.12	100% CD
06.06.12	100% CD - Revised
10.12.12	**Bid Set**

Sheet title:
COVER SHEET

Scale: N.T.S.

Seal and Signature:
REGISTERED ARCHITECT Minh TaTram Chu Hoang 030995 STATE OF NEW YORK

Date: 09.28.12
Project No.: 0902
Dwg By: MP
Chk By: MH

Dwg No:
G-000.00